ORDER NO. KM49208241A3

Service Manual

EASA-PHONE
ELECTRONIC MODULAR
SWITCHING SYSTEM

KX-T30810B-3

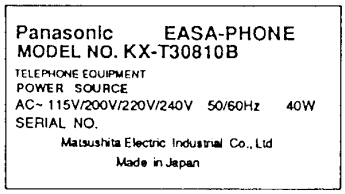

(Model KX-T30810B)

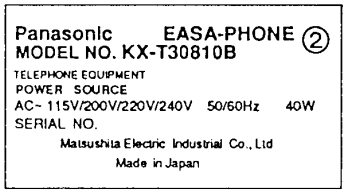

(Model KX-T30810B-2)

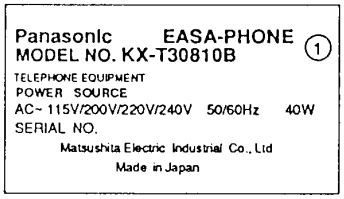

(Model KX-T30810B-1)

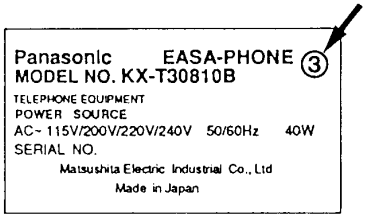

(Model KX-T30810B-3)

1. There are 4 types of model KX-T30810B, such as KX-T30810B, KX-T30810B-1 KX-T30810B-2, and KX-T61610B-3.
2. The model KX-T30810B-3, has a mark ③ on the name plate in figure left.
3. Please use this manual for model KX-T30810B-3.

Note: Technical Guide...Refer to the KX-T30810B-1 Technical Guide (order No. KM48903368G3).

COMPARISON TABLES/СРАВНИТЕЛЬНЫЕ ТАБЛИЦЫ
PROGRAMMING TABLE/ТАБЛИЦА ПРОГРАММИРОВАНИЯ
WIRING CONNECTION DIAGRAM/СХЕМА СОЕДИНЕНИЙ
SCHEMATIC DIAGRAM/ПРИНЦИПИАЛЬНАЯ СХЕМА
REPLACEMENT PARTS LIST/ СПИСОК ЗАПАСНЫХ ЧАСТЕЙ

Panasonic

■ SPECIFICATIONS COMPARISON TABLE

SPECIFICATIONS	KX-T30810-1	**KX-T30810B-3**
General Description 4. Power Supplies	Primary AC 120 V, 60 Hz	Primary AC 115/200/220/240 V, 50/60 Hz
Characteristics 5. Primary Power	120 V ac, 60 Hz, 0.4 A maximum	115/200/220/240 V ac, 50/60 Hz 0.4 A maximum

■ CONNECTION COMPARISON TABLE

CONNECTION	KX-T30810-1	**KX-T30810B-3**
Optional Battery Adaptor	KX-A16	KX-A16B
Power Supply	120 V, 60 Hz	115/200/220/240 V, 50/60 Hz
Model No.	KX-T30810	KX-T30810B

■ BLOCK DIAGRAM COMPARISON TABLE

BLOCK DIAGRAM	KX-T30810-1	**KX-T30810B-3**
Power Supply	AC 120 V, 60 Hz	AC 115/200/220/240 V, 50/60 Hz

■ PROGRAMMING

Notes: 1. For details of installation, refer to the Installation Manual (Part No. PQQX5289Z).
2. For details of operation, refer to the User Guide (Part No. PQQX5291Z).

(Model KX-T30810-1)

Notes: 1. For details of installation, refer to the Installation Manual (Part No. PQQX5391Z) and Leaflet (Part No. PQQX10231Z).
2. For details of operation, refer to the User Guide [Part No. PQQX5392Z (English), PQQX5393Z (Spanish)].

(Model KX-T30810B-3)

■ PROGRAMMING TABLE

Toll Restriction—Class Assignment | [10]

[NEXT] [NEXT] [SELECT] [MEMORY] [END]
- [SELECT] ---- *CLASS 1/2/3/4*
- [NEXT] ------ *until the desired extension number appears*

	Default	*To make program change*							
Extensions	*all extensions*	*11*	*12*	*13*	*14*	*15*	*16*	*17*	*18*
Class 1 (all calls)	×								
Class 2 (toll calls, local calls)									
Class 3 (selected area-codes, local calls)									
Class 4 (local calls)									

(Model KX-T30810-1)

Toll Restriction—Class Assignment | [10]

[NEXT] [NEXT] [SELECT] [MEMORY] [END]
- [SELECT] ---- *CLASS 1/2/3*
- [NEXT] ------ *until the desired extension number appears*

	Default	*To make program change*							
Extensions	*all extensions*	*11*	*12*	*13*	*14*	*15*	*16*	*17*	*18*
Class 1	×								
Class 2									
Class 3									

(Model KX-T30810B-3)

Programmable Operator Call | [12]

[NEXT] [NEXT] [SELECT] [MEMORY] [END]
- [SELECT] ---- *ENABLE/DISABLE*
- [NEXT] ---- *until the desired extension number appears*

	Default	*To make program change*							
Extensions	*all extensions*	*11*	*12*	*13*	*14*	*15*	*16*	*17*	*18*
Enable	×								
Disable									

(Model KX-T30810-1)

Call Back Time | [12]

[NEXT] [SELECT] [MEMORY] [END]
- [SELECT] ----*30 SEC/15 SEC*

	Default	*To make program change*
30 sec	×	
15 sec		

(Model KX-T30810B-3)

Programmable Toll Prefix	[29]	[NEXT] [SELECT] [MEMORY] [END] └- - - - - *WITH 1/ WITHOUT 1*

	Default	*To make program change*
With 1	×	
Without 1		

Programmable secret Auto Dial	[30]	[NEXT] [SELECT] [MEMORY] [END] └- - - *NO SECRET/ SECRET*

	Default	*To make program change*
No secret	×	
Secret		

(Model KX-T30810-1)

↓

Programmable secret Auto Dial	[29]	[NEXT] [SELECT] [MEMORY] [END] └- - - *NO SECRET/ SECRET*

	Default	*To make program change*
No secret	×	
Secret		

(Model KX-T30810B-3)

Addition

Programming for Door Opener

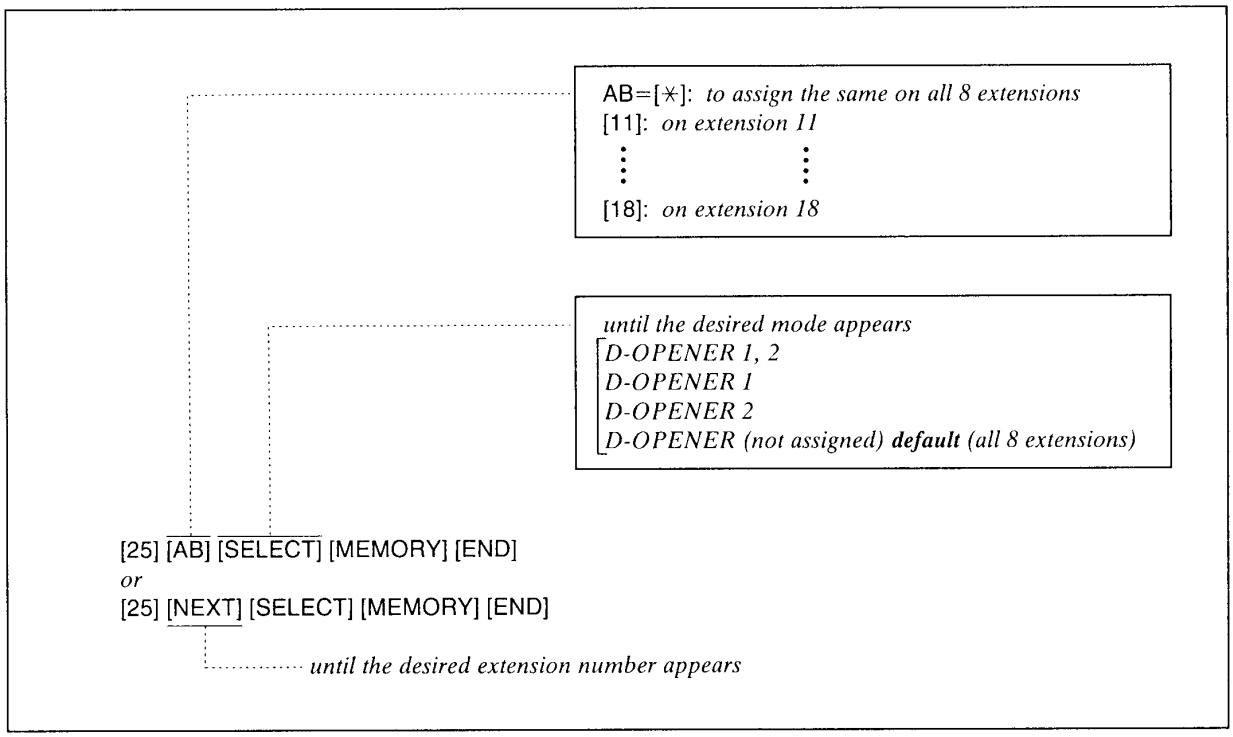

Description

Allows each extension to be programmed for unlocking the door. Up to 2 Door Openers can be connected to your unit.

Programming

1. *Dial (25).*
   "ENTER EXT NO" will be displayed.
2. *Press the NEXT button.*
   "11: D-OPENER..." will be displayed.
3. *Keep pressing the SELECT button until the desired mode of door openers is displayed.*
4. *Press the MEMORY button.*
   The LCD will stop blinking.
5. *Repeat step 2 to 4 to program the mode of the other extensions.*
6. *To return to the initial programming mode, press the END button.*

Conditions

- *When you start the programming from step 1, you may dial the desired extension number instead of NEXT button at step 2.*
- *The PREV button allows you to go to the previous extension for displaying the door opener assignment.*

Example:

To allow extension 12 to open the only D-OPENER 1.
[25] [12] [SELECT] [SELECT] [MEMORY] [END]

Programming Table

	Default	*To make program change*							
Extensions	*all extensions*	*11*	*12*	*13*	*14*	*15*	*16*	*17*	*18*
not assigned	×								
Door opener 1									
Door opener 2									

■ TOOL FOR SERVICE

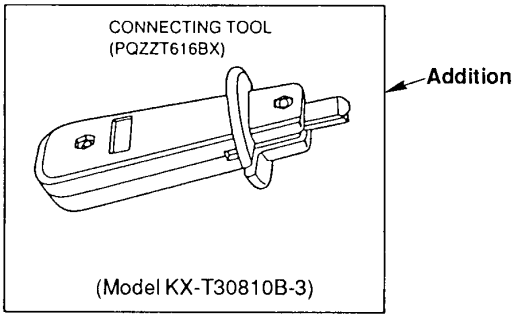

■ EXPLODED VIEW

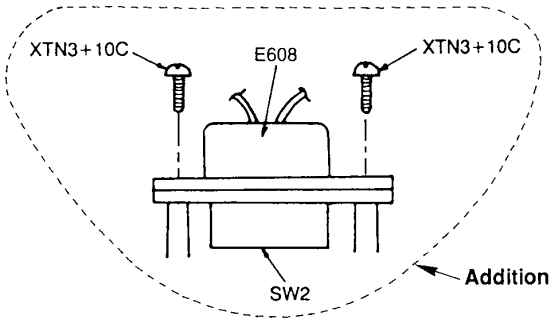

(Model KX-T30810B-3)

■ ACCESSORIES & PACKING MATERIALS

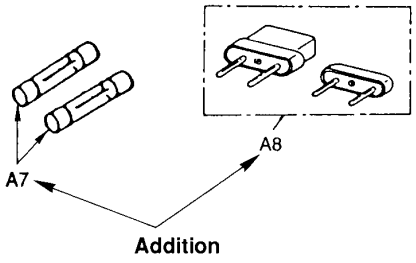

(Model KX-T30810B-3)

WIRING CONNECTION DIAGRAM

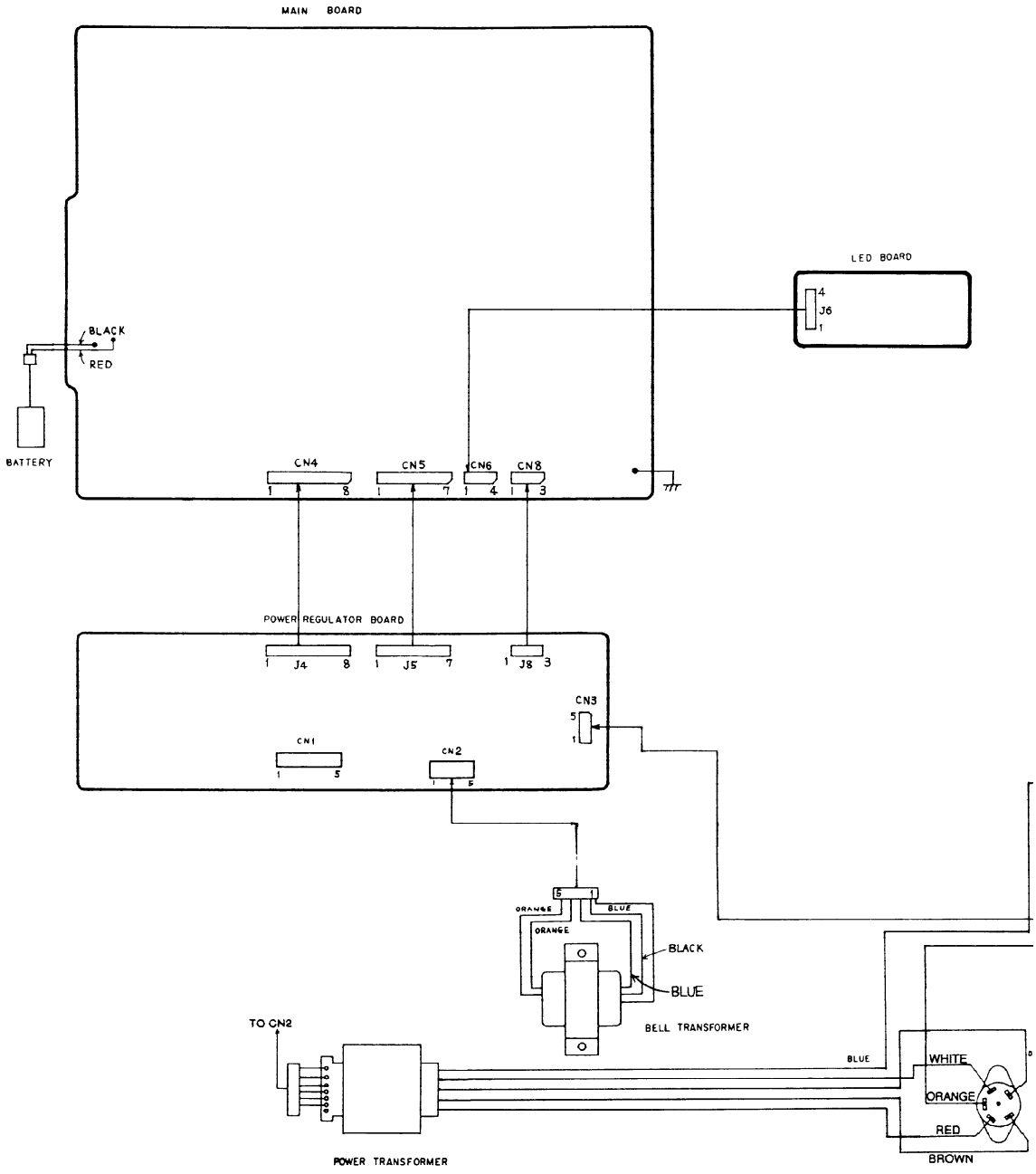

WIRING CONNECTION DIAGRAM

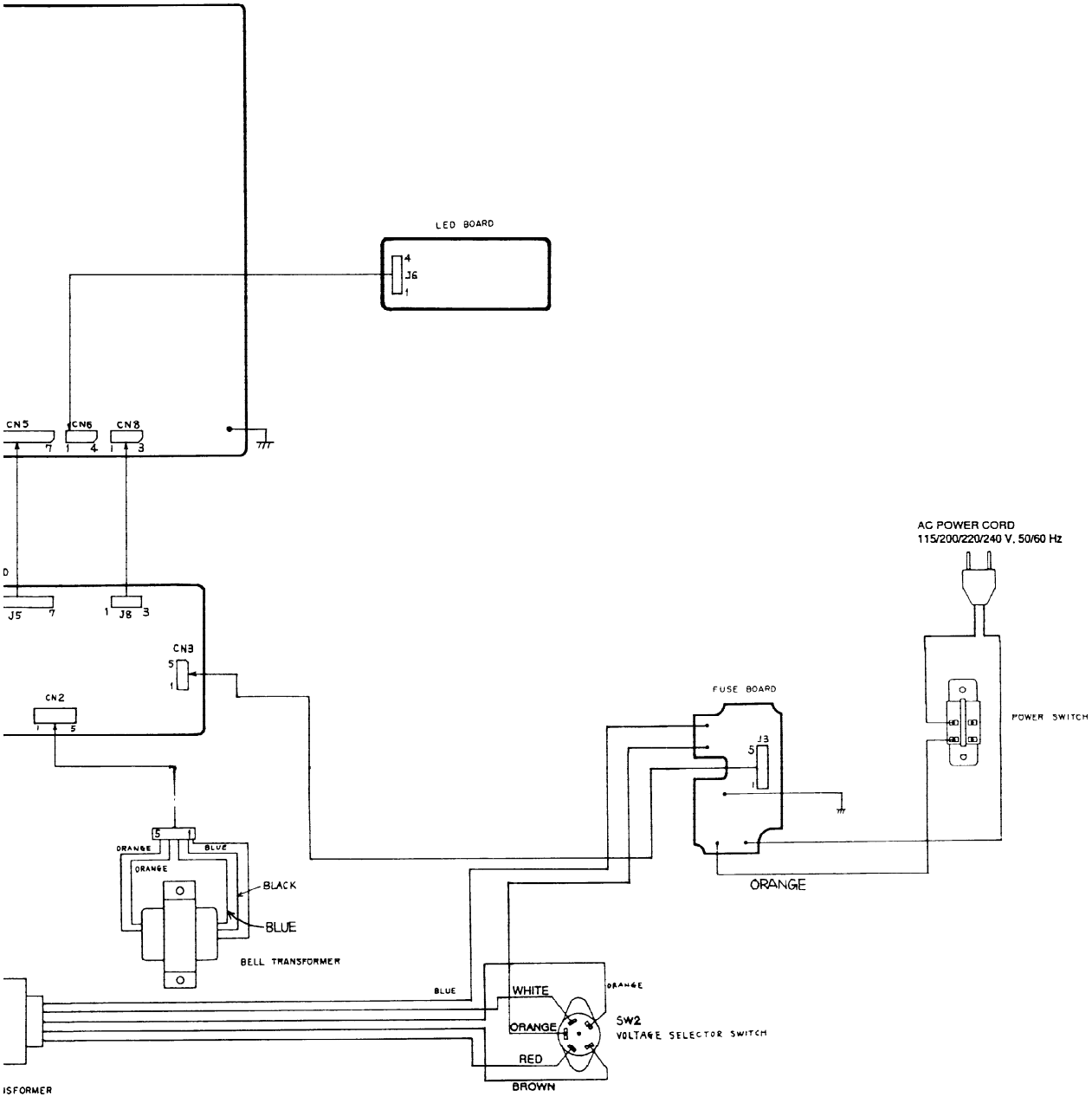

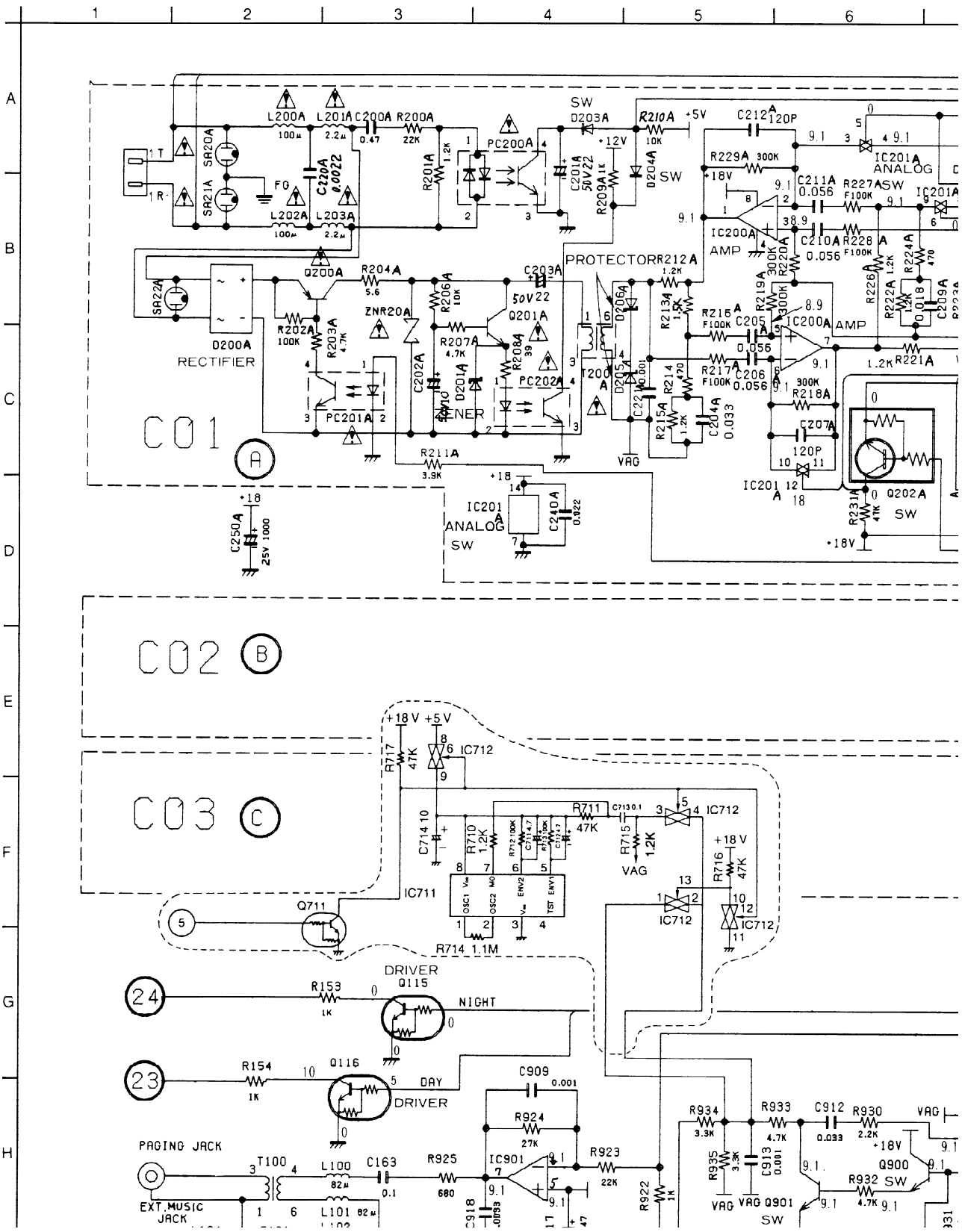

C01
C02
C03
RECTIFIER
PROTECTOR
AMP
ANALOG
SW
DRIVER
NIGHT
DAY
PAGING JACK
EXT.MUSIC JACK

SCHEMATIC DIAGRAM

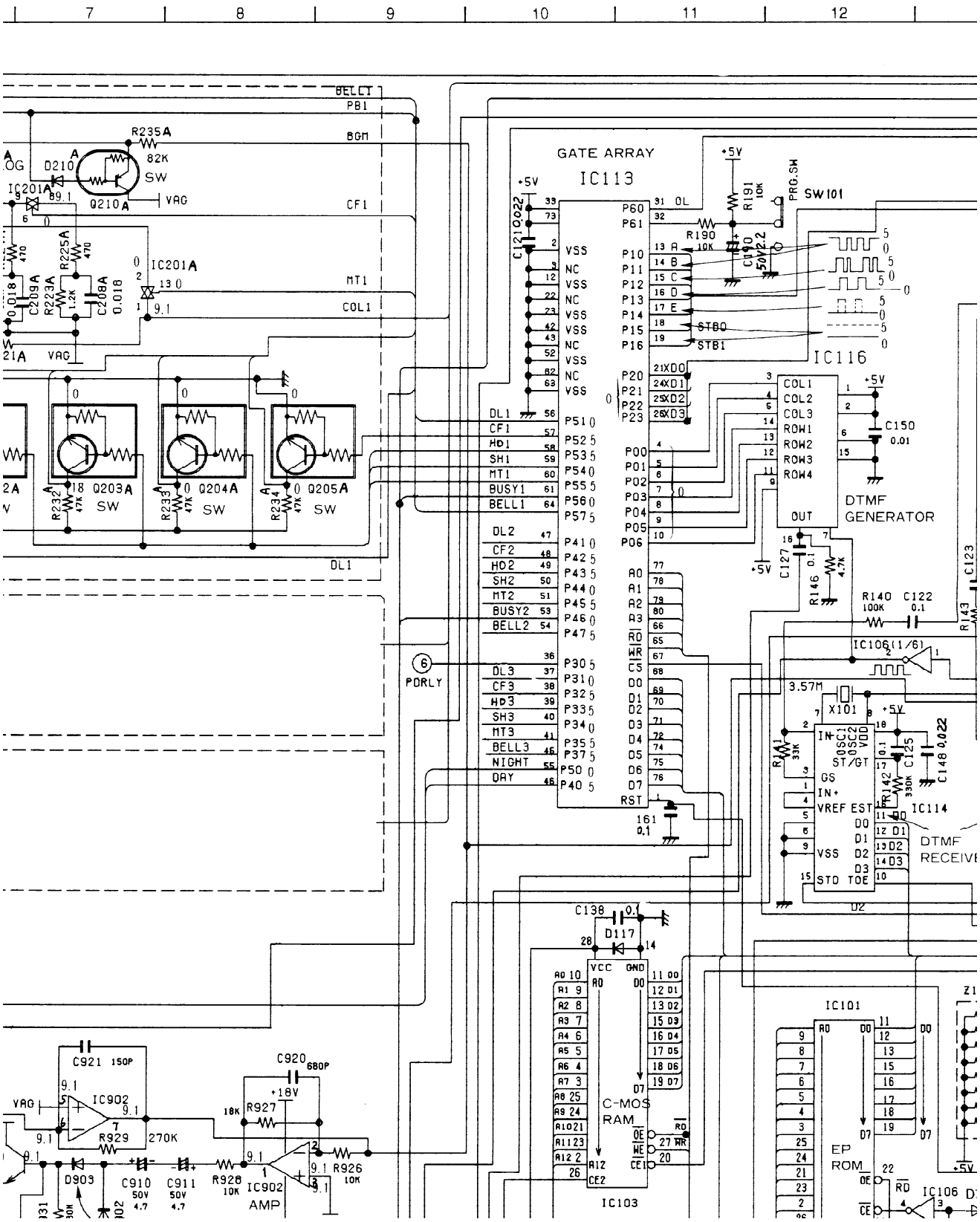

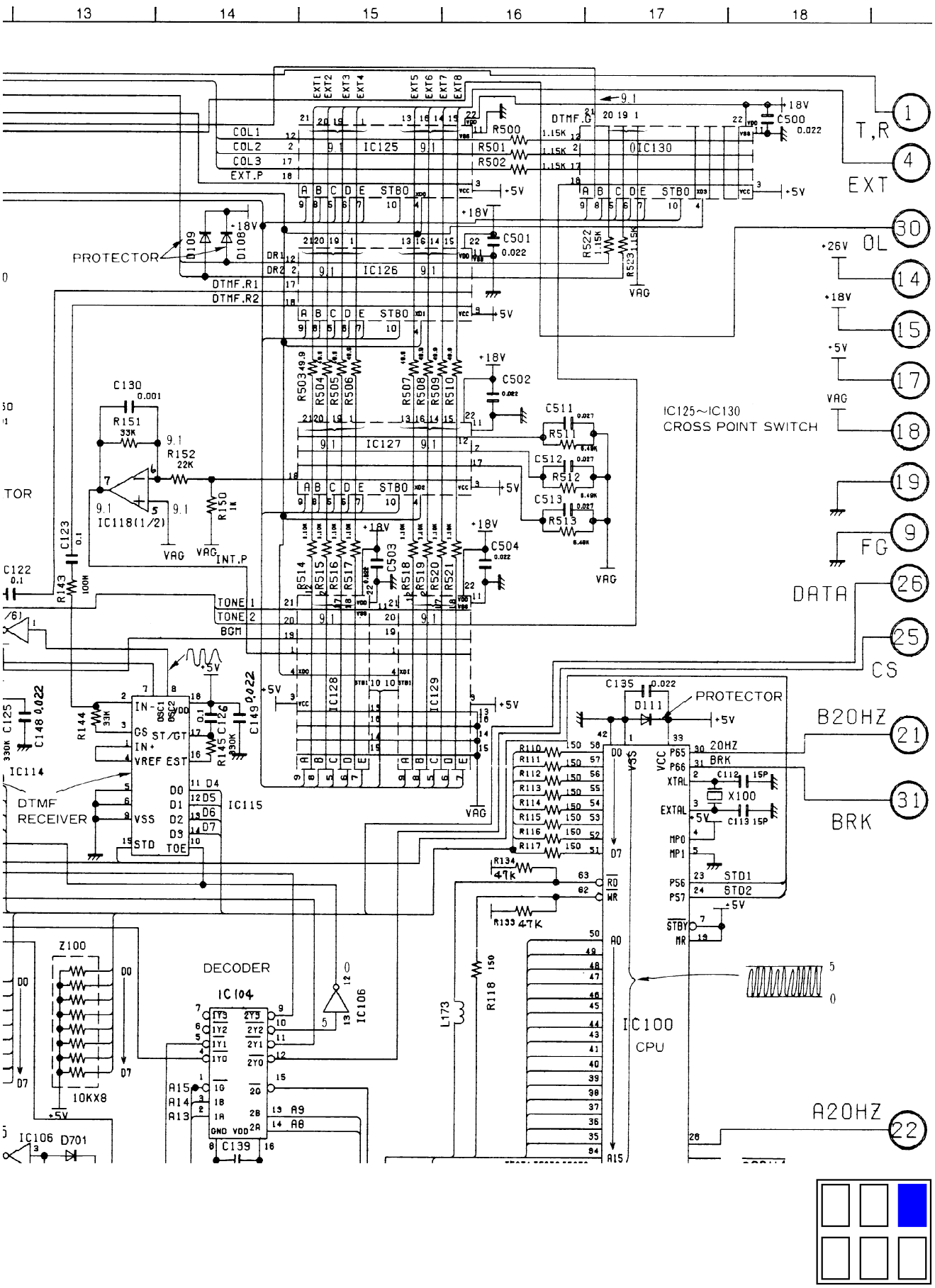

13
14
15
16
17
18
T,R
EXT
OL
FG
DATA
CS
B20HZ
BRK
A20HZ
PROTECTOR
IC125~IC130
CROSS POINT SWITCH
DTMF
RECEIVER
DECODER
IC104
IC100
CPU
IC115
IC114
IC118(1/2)
IC125
IC126
IC127
IC128
IC129
IC130
IC106
Z100
10KX8
X100

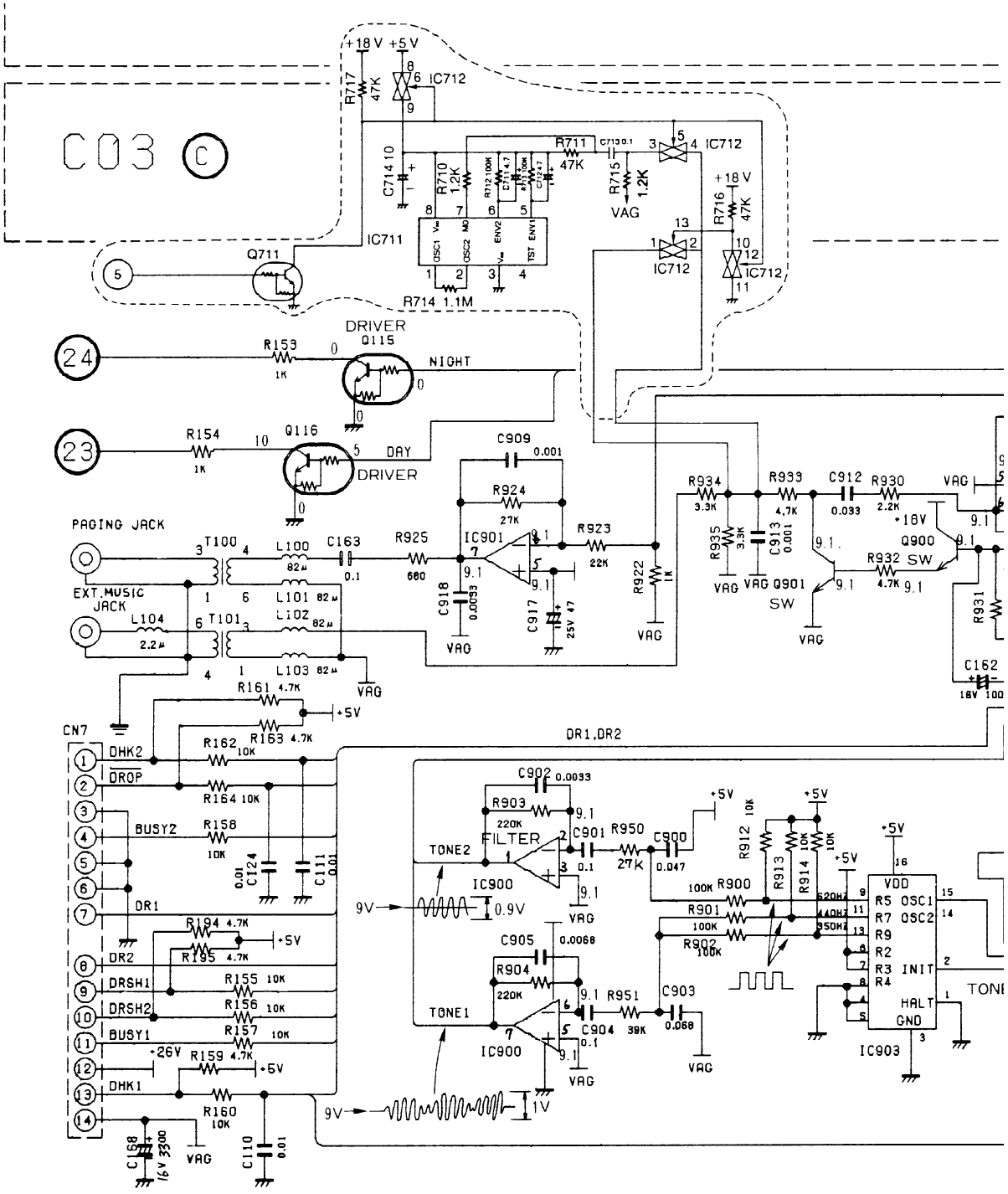

Notes:

1. SW1: Power switch.
2. SW100: Reset switch.
3. SW101: System program switch in "PROGRAM" position.
4. DC voltage measurements are taken with electronic voltmeter and oscilloscope from ground line.

   (•Power Switch ON condition
   •Voltage Value: V)

5. This schematic diagram may be modified at any time with the development of new technology.

6. Important safety notice
   Components identified by ⚠ mark have special characteristics important for safety. When replacing any of these components, use only manufacturer's specified parts.

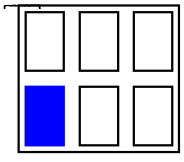

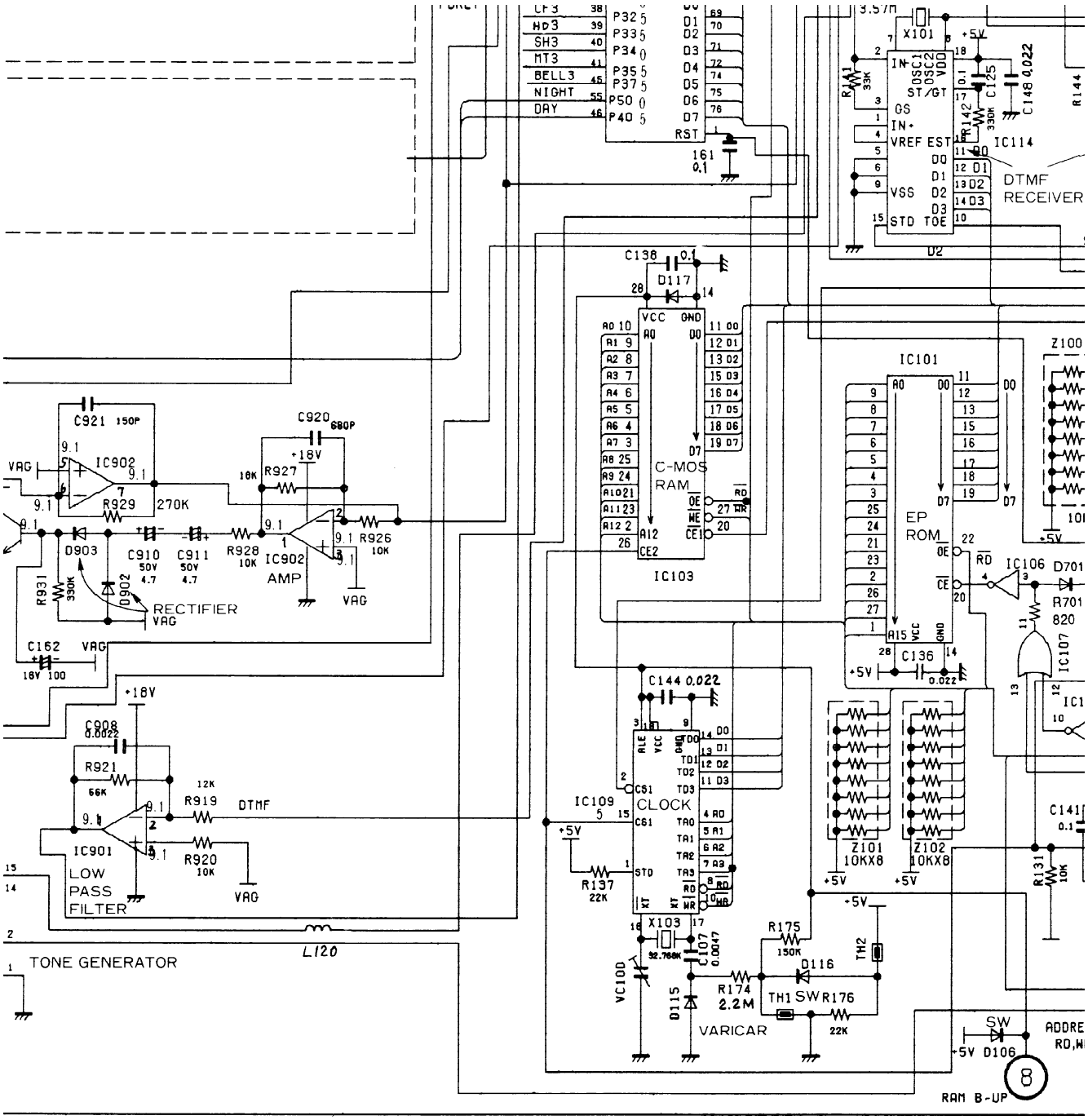

7.

Varcap.	General	Zener	LED	Photo Diode
Anode / Cathode	Anode / Cathode	Anode / Cathode	Anode / Cathode	Cathode / Anode

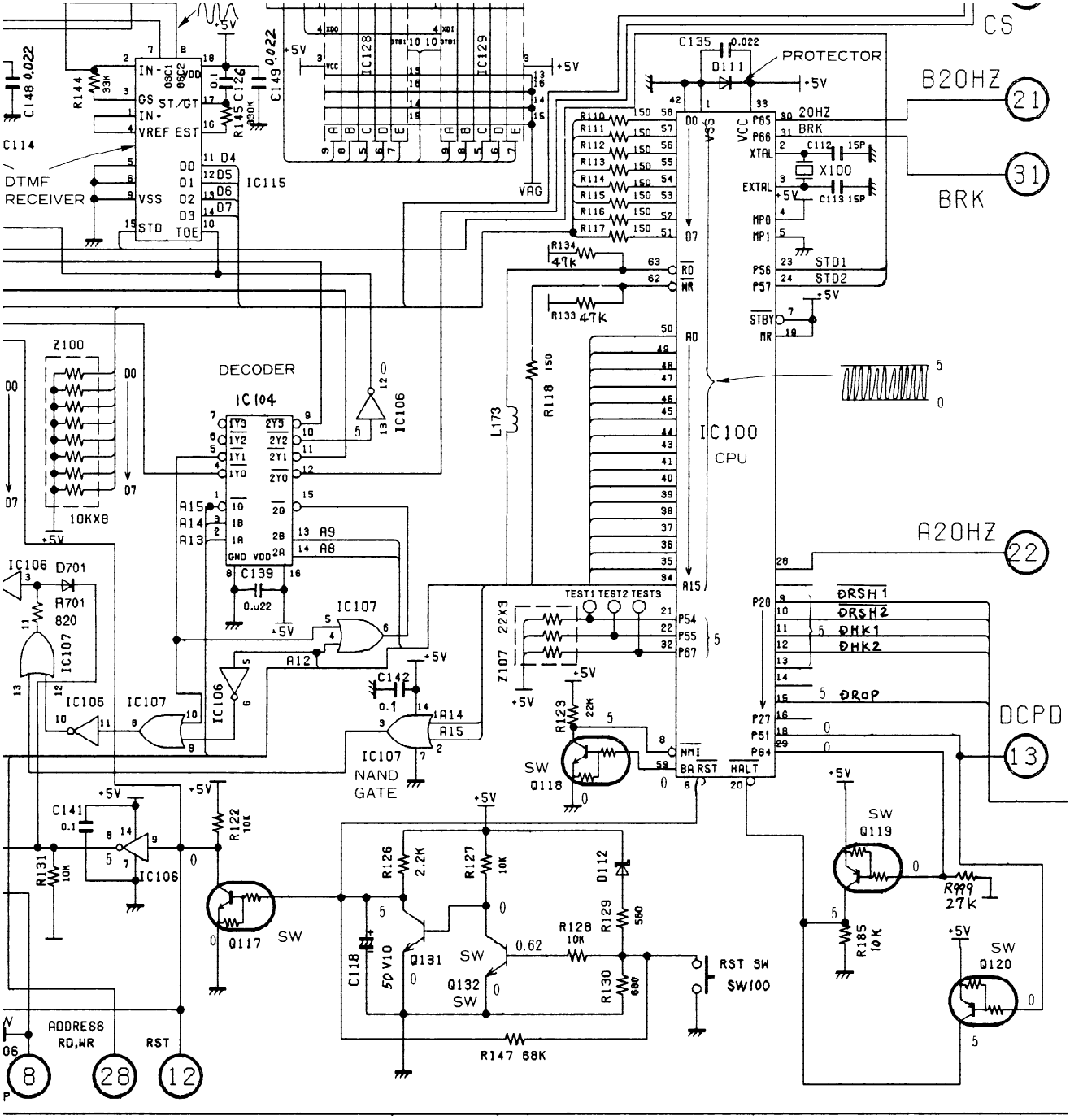

CS
B20HZ
21
BRK
31
A20HZ
22
DCPD
13
PROTECTOR
DTMF
RECEIVER
IC115
IC128
IC129
IC100
CPU
DECODER
IC104
IC106
IC107
NAND
GATE
Z100
10KX8
Z107
22X3
TEST1 TEST2 TEST3
DRSH1
DRSH2
DHK1
DHK2
DROP
SW
Q118
Q119
Q120
Q117
Q131
Q132
RST SW
SW100
ADDRESS
RD,WR
RST
8
28
12

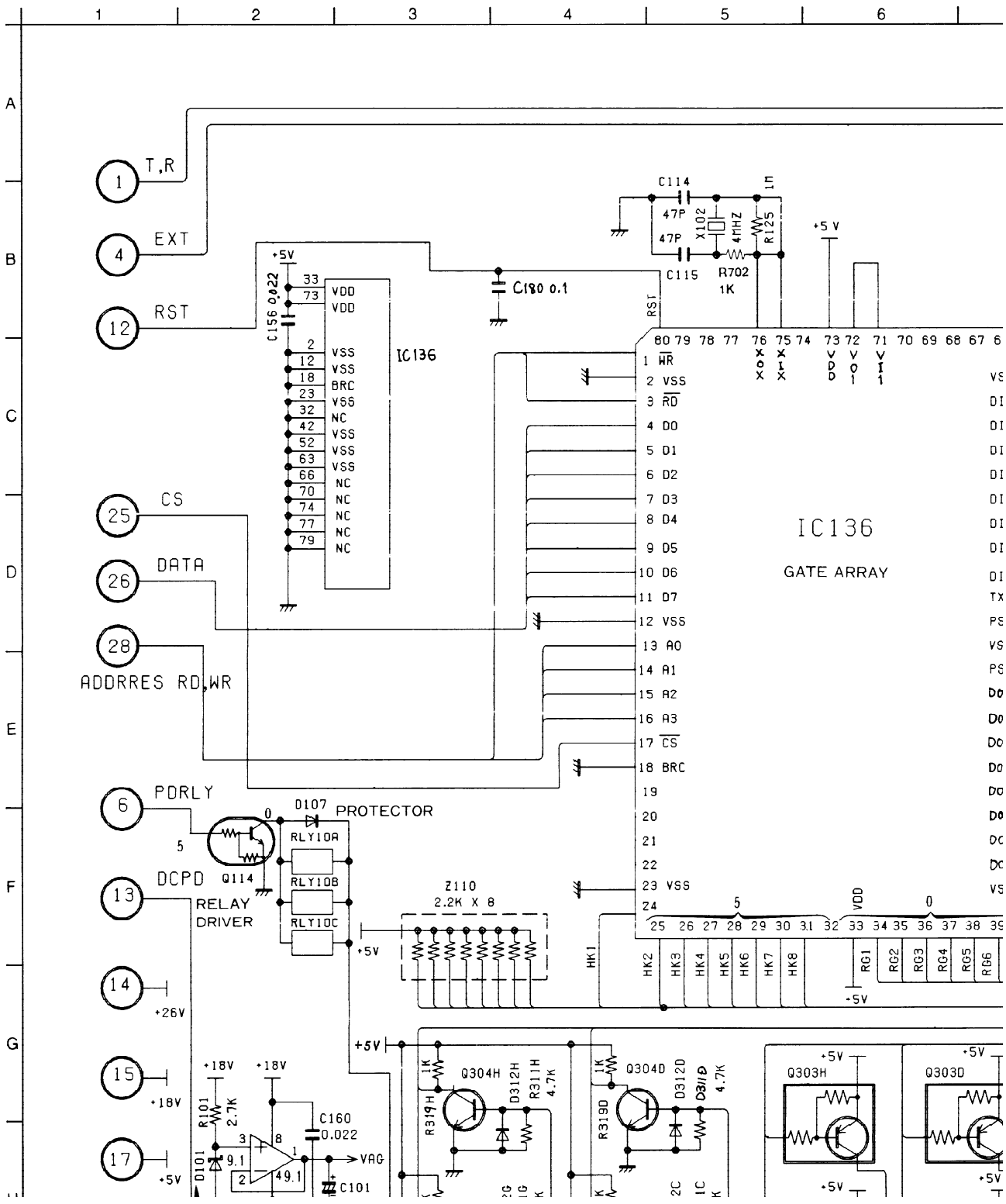

T,R
EXT
RST
CS
DATA
ADDRRES RD,WR
PDRLY
DCPD
RELAY DRIVER
PROTECTOR
IC136
GATE ARRAY
C114
47P
X102
4MHZ
R125
C115
R702
1K
C180 0.1
C156 0.022
+5V
+26V
+18V
VAG
Z110
2.2K X 8
Q304H
Q304D
Q303H
Q303D
R319H
R319D
D312H
D312D
R311H
R311D
4.7K
R101
2.7K
C160
0.022
C101
D101
D107
Q114
RLY10A
RLY10B
RLY10C

SCHEMATIC DIAGRAM

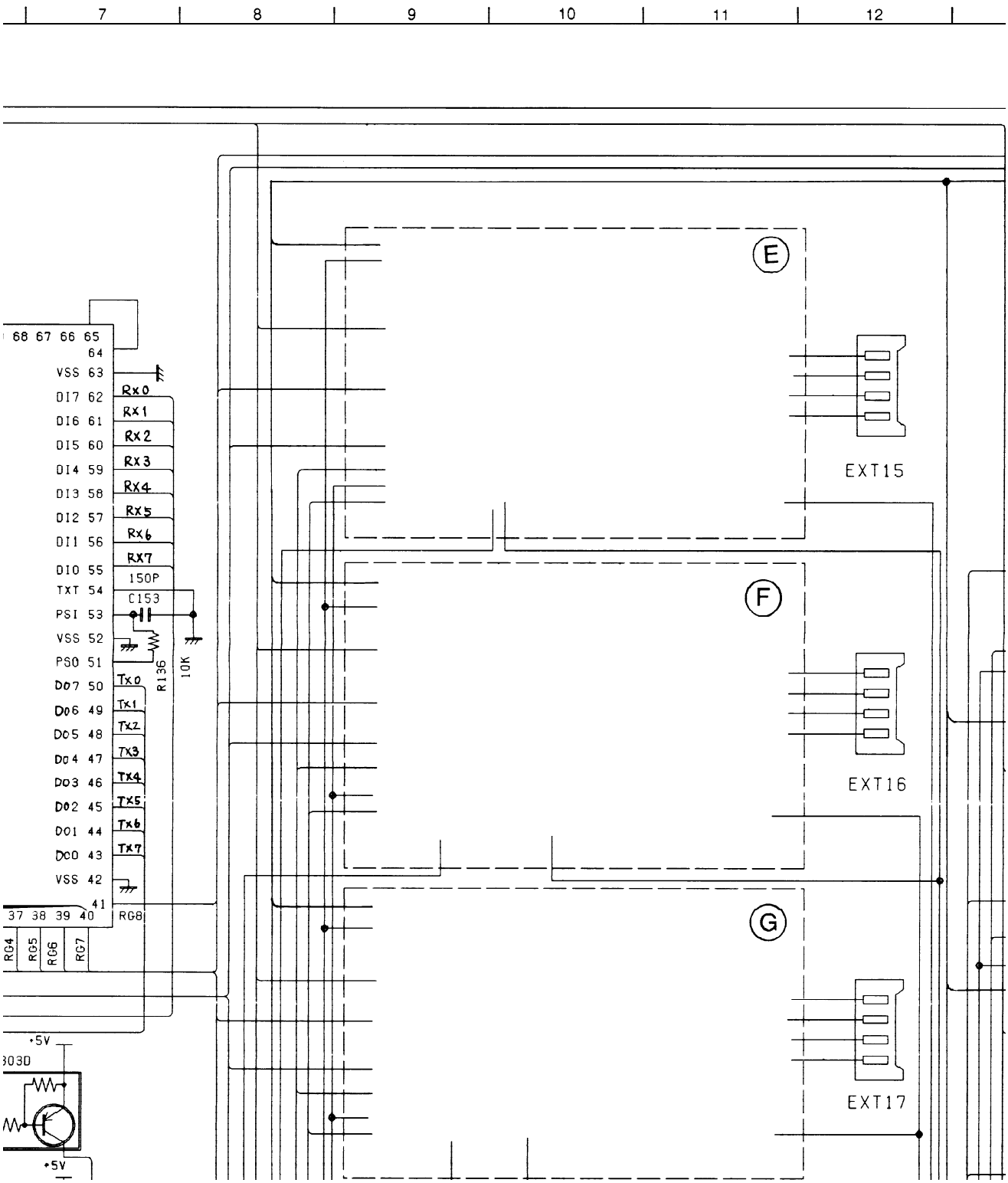

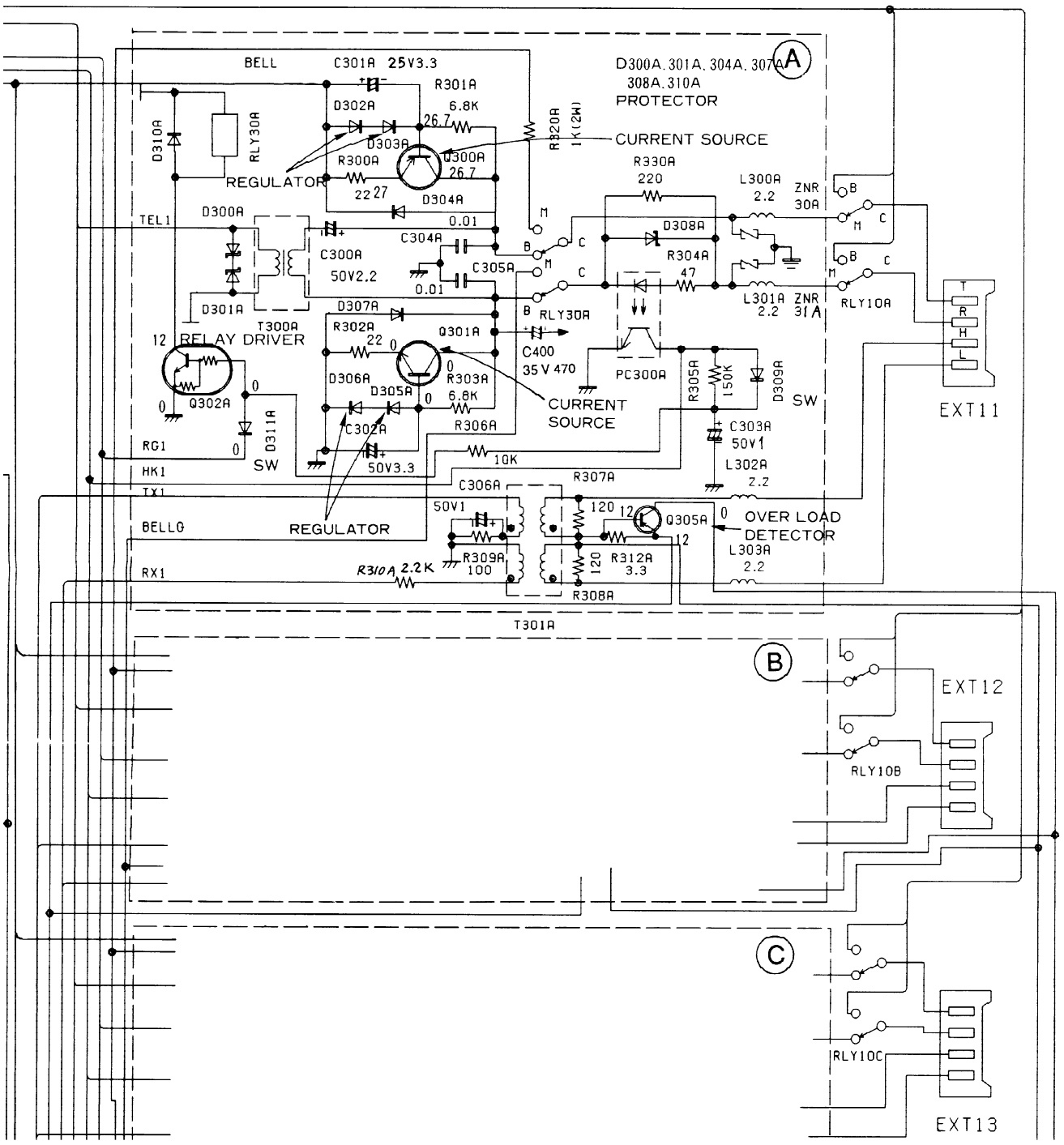
13
14
15
16
17
18
BELL
C301A 25V3.3
R301A
6.8K
D302A
26.7
D303A
D310A
RLY30A
REGULATOR
R300A
Q300A
26.7
22 27
D304A
D300A
TEL1
0.01
C304A
C300A
50V2.2
C305A
0.01
D301A
T300A
D307A
R302A
22
Q301A
12 RELAY DRIVER
Q302A
D306A
D305A
R303A
6.8K
C302A
50V3.3
R306A
10K
RG1
D311A
SW
HK1
TX1
BELLG
REGULATOR
RX1
R310A 2.2K
C306A
50V1
R309A
100
R307A
120
12
Q305A
OVER LOAD
DETECTOR
L303A
2.2
R312A
3.3
R308A
T301A
D300A. 301A. 304A. 307A
308A. 310A
PROTECTOR
A
R320A
1K(2W)
CURRENT SOURCE
R330A
220
L300A
2.2
ZNR
30A
D308A
R304A
47
L301A
2.2
ZNR
31A
RLY10A
RLY30A
C400
35V 470
PC300A
CURRENT
SOURCE
R305A
150K
D309A
SW
C303A
50V1
L302A
2.2
EXT11
B
EXT12
RLY10B
C
RLY10C
EXT13

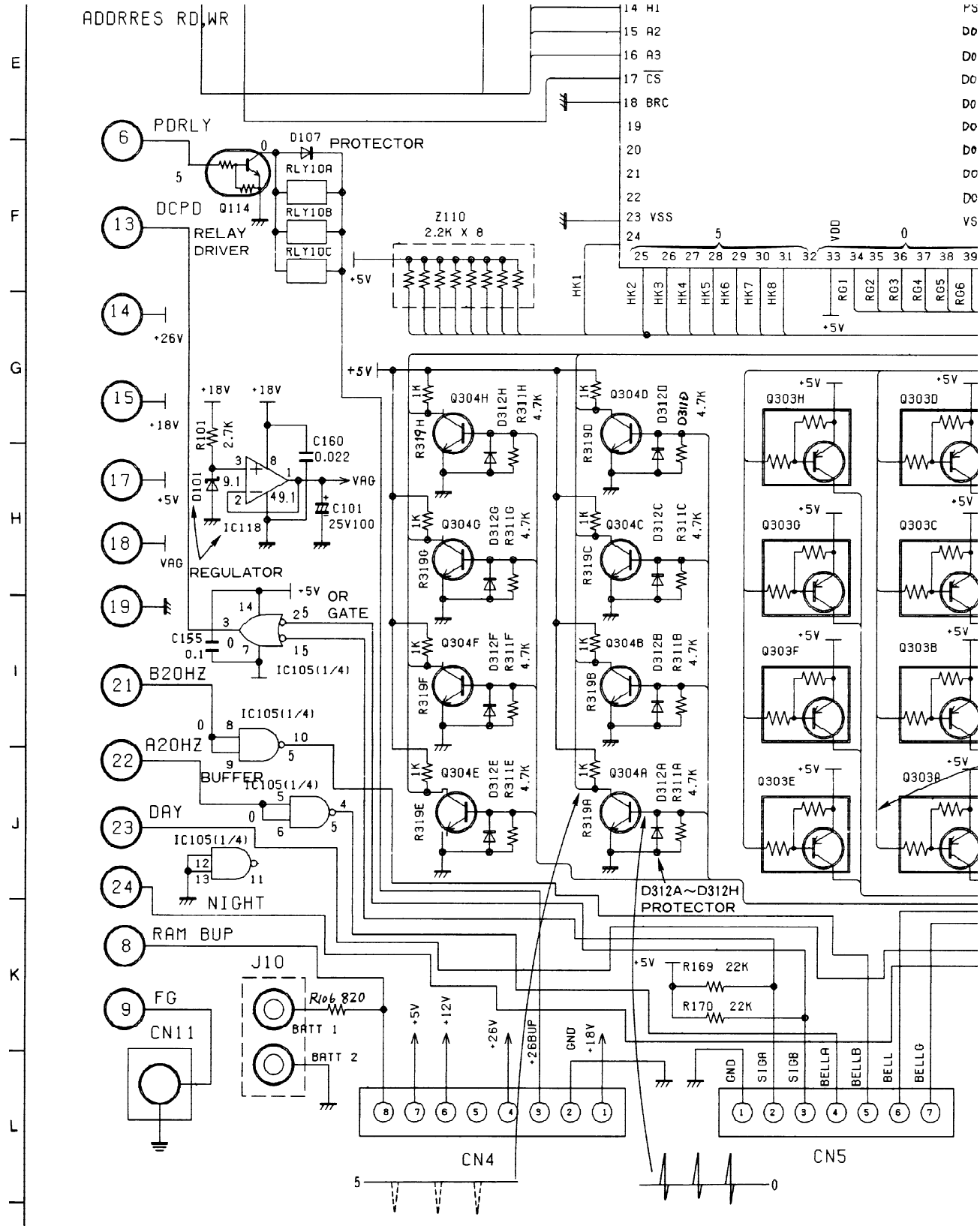
ADDRRES RD,WR
PDRLY
D107 PROTECTOR
RLY10A
RLY10B
RLY10C
Q114
DCPD
RELAY DRIVER
Z110 2.2K X 8
+5V
+26V
+18V
VAG
REGULATOR
C160 0.022
C101 25V100
IC118
R101 2.7K
D101
OR GATE
C155 0.1
IC105(1/4)
B20HZ
A20HZ
BUFFER
DAY
NIGHT
RAM BUP
FG
CN11
J10
R106 820
BATT 1
BATT 2
Q304H
Q304G
Q304F
Q304E
Q304D
Q304C
Q304B
Q304A
Q303H
Q303G
Q303F
Q303E
Q303D
Q303C
Q303B
Q303A
D312A~D312H PROTECTOR
R169 22K
R170 22K
CN4
CN5
GND
+5V
+12V
+26V
+26BUP
+18V
S10A
S10B
BELLA
BELLB
BELL
BELLG

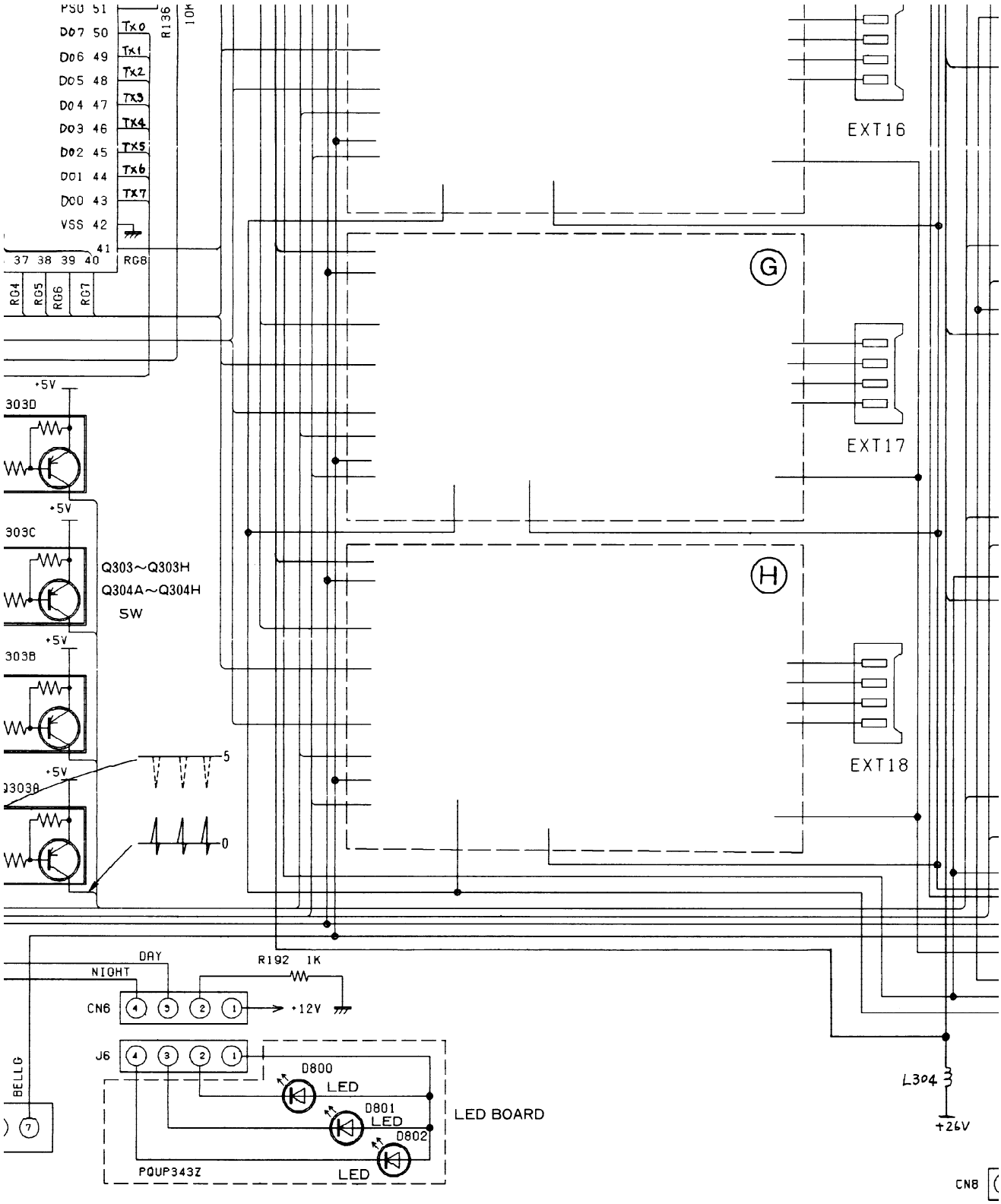
PSU 51
D07 50
D06 49
D05 48
D04 47
D03 46
D02 45
D01 44
D00 43
VSS 42
41
37 38 39 40
RG8
RG4
RG5
RG6
RG7
R136
10K
Tx0
Tx1
Tx2
Tx3
Tx4
Tx5
Tx6
Tx7
+5V
303D
303C
303B
303A
Q303~Q303H
Q304A~Q304H
SW
5
0
EXT16
EXT17
EXT18
G
H
DAY
NIGHT
R192 1K
CN6
+12V
J6
BELLG
D800
LED
D801
LED
D802
LED
LED BOARD
PQUP343Z
L304
+26V
CN8

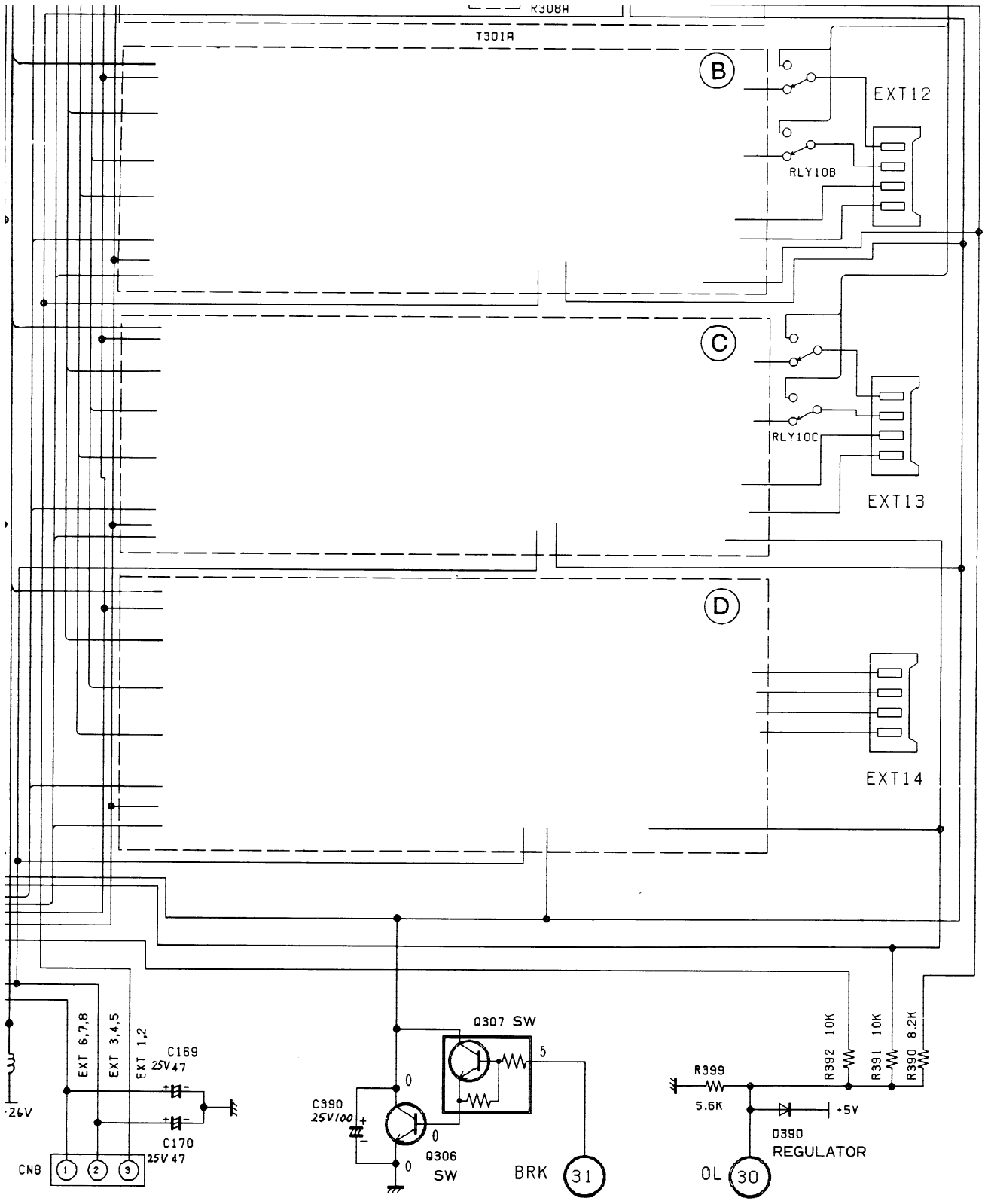
R308A
T301A
B
EXT12
RLY10B
C
RLY10C
EXT13
D
EXT14
EXT 6,7,8
EXT 3,4,5
EXT 1,2
C169
25V47
C170
25V47
26V
CN8
1
2
3
Q307 SW
5
0
C390
25V100
0
Q306
SW
0
BRK
31
R399
5.6K
R392 10K
R391 10K
R390 8.2K
+5V
D390
REGULATOR
OL
30

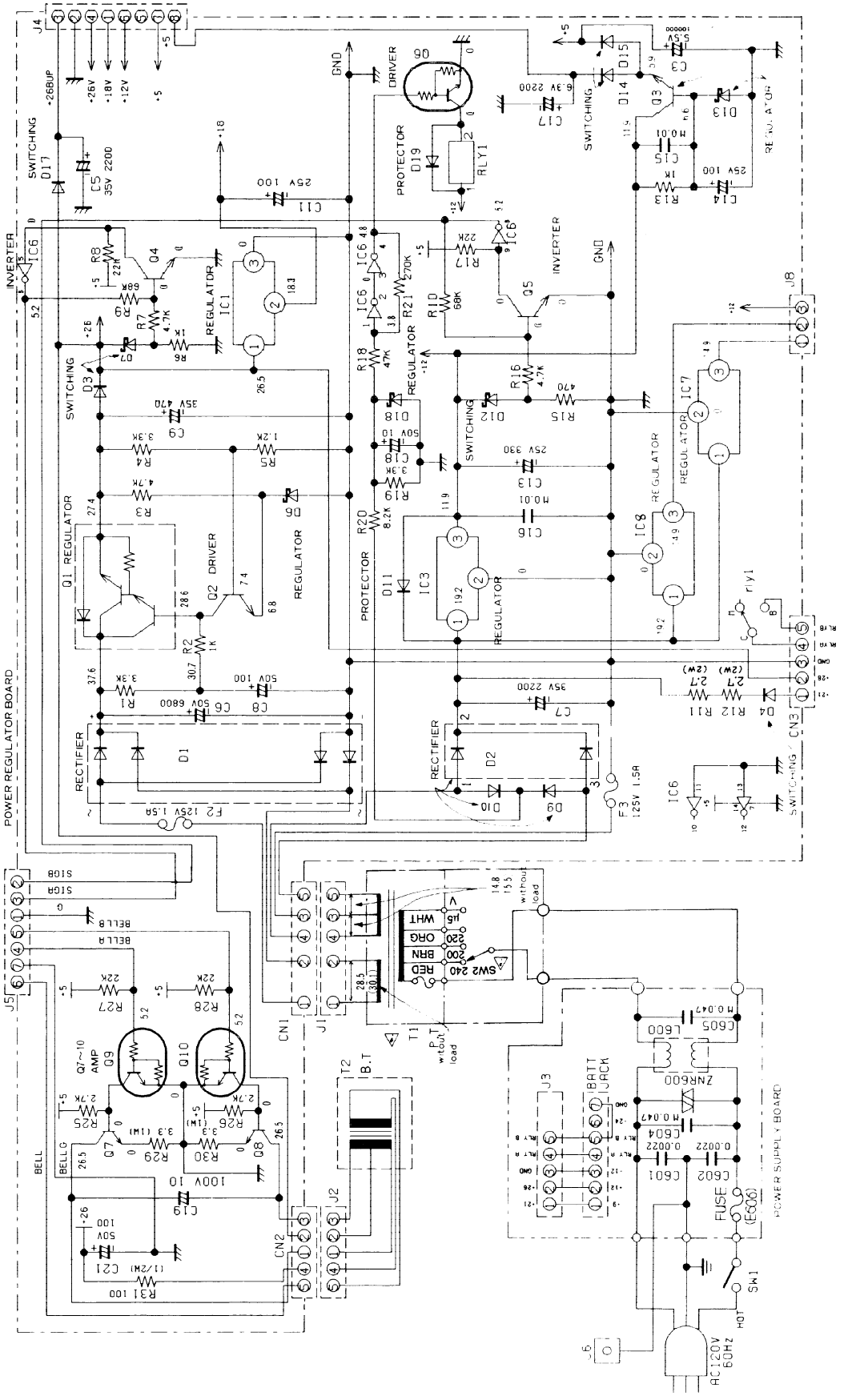
POWER REGULATOR BOARD
POWER SUPPLY BOARD
INVERTER
SWITCHING
REGULATOR
DRIVER
PROTECTOR
RECTIFIER
BELL
BELL G
BELL A
BELL B
SIGA
SIGB
Q7~10 AMP
AC120V 60Hz
FUSE (E606)
BATT JACK
ZNR600
SW1
SW2 240
WHT
ORG
BRN
RED
without load
GND
J1
J2
J3
J4
J5
J6
J8
CN1
CN2
CN3
T1
T2
B.T
RLY1
F2 125V 1.5A
F3 125V 1.5A
RLYB
RLYA
GND
+26BUP
+26V
+18V
+12V
+5

REPLACEMENT PARTS LIST

Notes: Model KX-T30810B-3

1. The marking (RTL) indicates that the Retention Time is limited for this item. After the discontinuation of this assembly in production, the item will continue to be available for a specific period of time. The retention period of availability is dependant on the type of assembly, and in accordance with the laws governing part and product retention. After the end of this period, the assembly will no longer be available.
2. Important safety notice. Components identified by the ⚠ mark special characteristics important for safety. When replacing any of these components, use only manufacturer's specified parts.
3. The S mark indicates service standard parts and may differ from production parts.
4. RESISTORS & CAPACITORS
   Unless otherwise specified.
   All resistors are in ohms(Ω) k=1000Ω,M=1000kΩ
   All capacitors are in MICRO FARADS(μF) P= 0.001μF
   *Type &Wattage of Resistor

Type

ERC:Solid	ERX:Metal Film	PQRD:Carbon
ERD:Carbon	ERG:Metal Oxide	PQRQ:Fuse
PQ4R:Chip	ERO:Metal Film	ERF:Wire Wound

Wattage

10,16,18:1/8W	14,25,S2:1/4W	12,50,S1:1/2W	1:1W	2:2W	5:5W

*Type & Voltage of Capacitor

Type

ECFD:Semi-Conductor	ECCD,ECKD,PQCBC, : Ceramic
ECQS:Styrol	ECQM,ECQV,ECQE,ECQU,ECQB : Polyester
PQCBX,ECUV:Chip	ECEA,ECSZ,ECOS : Electrolytic
ECMS:Mica	ECQP : Polypropylene

Voltage

ECQ Type	ECQG ECQV Type	ECSZ Type	Others	
1H: 50V	05: 50V	OF:3.15V	OJ :6.3V	1V :35V
2A:100V	1:100V	1A:10V	1A :10V	50,1H:50V
2E:250V	2:200V	1V:35V	1C :16V	1J :63V
2H:500V		OJ:6.3V	1E,25:25V	2A :100V

Ref. No.	Part No.	Part Name & Description	Pcs
		CABINET & ELECTRICAL PARTS	
1	PQYM30810BX3	Rear Cabinet Assembly	1
1-1	PQGT10288Z	Name Plate	1
1-2	PQHR9120Y8	Hook	2
1-3	PQUS91Z	Spring, Hook	2
2	PQKE31Z8	Cabinet Door	1
3	PQYF1T30810B	Front Cabinet Assembly	1
4	PQBH2Z	Hinge-A	2
5	PQHR9121Z8	Hinge-B	2
6	PQYF230810B3	Inside Cover Assembly	1
6-1	PQUS102Z	Leaf Spring	2
6-2	PQHR118Z	Cord Holder-A	1
6-3	PQHR119Z	Cord Holder-B	1
6-4	PQHR120Z	Cord Holder-C	1
7	P-01H-F2G1	Battery	1
8	PQUV50Z	Battery Cover	1
		ACCESSORIES AND PACKING MATERIALS	
A1	PQQX5391Z	Installation Manual	1
A1	PQQX10231Z	Leaflet for Installation Manual	1
A2	PQQX5392Z	User Guide	1
A2	PQQX5393Z	User Guide (Spanish)	1
A3	PQHE10Z	Mounting Bracket (Curl Plug)	3
A4	PQHE5008Z	Mounting Bracket (Screw)	3
A5	PQJP1E1Z	Plug-A	1
A6	PQJP1E2Z	Plug-B	1
A7	RJP120ZS	Plug, Power Cord ⚠	1
A8	PQQX2193Y	Leaflet for Door Opener	1
P1	XZB45X60A05	Protection Cover	1
P2	PQPK1116W	Packing Case	1
P3	PQPN9036Y	Cushion Complete (L,R Side)	1
P4	PQPN668Z	Cushion	1

Ref. No.	Part No.	Part Name & Description		Pcs
		MAIN BOARD PARTS		
PCB1	PQWP130810B3	Main P.C. Board Ass'y (RTL)		1
		(ICs)		
IC100	PQVIH63B03XP	IC		1
IC101	PQWI30810BX3	IC		1
IC102	Not Used			
IC103	PQVIHM6264LA	IC		1
IC104	PQVITC7H139P	IC		1
IC105	PQVIPD4011BC	IC		1
IC106	PQVITC7H04P	IC		1
IC107	PQVIM7H32P	IC		1
IC108	Not Used			
IC109	PQVIMS6242BS	IC		1
IC110-112	Not Used			
IC113	PQVI672191F	IC		1
IC114,115	PQVIMT8870CE	IC		2
IC116	PQVITP5089N	IC		1
IC117	Not Used			
IC118	PQVINJM4558D	IC		1
IC119-124	Not Used			
IC125-130	PQVIM402101P	IC		6
IC131-135	Not Used			
IC136	PQVI671152F	IC		1
IC200A,200B ,200C	PQVINJM4558D	IC		3
IC201A,201B ,201C	PQVIPD4066BC	IC		3
IC711	PQVISV7860SG	IC		1
IC712	PQVIPD4066BC	IC		1
IC900,901 ,902	PQVINJM4558D	IC		3
IC903	PQVIBU3140	IC		1
		(TRANSISTORS)		
Q114,115 ,116	DTC143XA	Transistor (Si)		3
Q117,118	DTC144A	Transistor (Si)	S	2
Q119,120	DTA143A	Transistor (Si)	S	2
Q131,132	2SC2021	Transistor (Si)		2
Q200A,200B ,200C	2SA1626	Transistor (Si)	⚠	3
Q201A,201B ,201C	2SC2235	Transistor (Si)	⚠	3
Q202A,202B ,202C,203A ,203B,203C ,204A,204B ,204C,205A ,205B,205C	DTC144A	Transistor (Si)	S	12
Q210A,210B ,210C	DTA124XA	Transistor (Si)		3
Q300A-300H	2SB644	Transistor (Si)		8
Q301A-301H	2SD639	Transistor (Si)		8
Q302A-302H	PQVTDTC114Y	Transistor (Si)		8
Q303A-303H	DTA143EA	Transistor (Si)	S	8
Q304A-304H	2SC2021	Transistor (Si)		8
Q305A-305H	2SA937	Transistor (Si)		8
Q306A-H	2SC1740S	Transistor (Si)		8
Q307	DTC144A	Transistor (Si)	S	1
Q711	DTC144A	Transistor (Si)	S	1
Q900	2SC2021	Transistor (Si)		1
Q901	2SC2878	Transistor (Si)		1

Ref. No.	Part No.	Part Name & Description		Pcs
		(DIODES)		
D101	MA4091	Diode (Si)		1
D102-105	Not Used			
D106-109	1SS131	Diode (Si)		4
D110	Not Used			
D111	1SS131	Diode (Si)		1
D112	MA4039	Diode (Si)		1
D113,114	Not Used			
D115	1SV124	Diode (Si)		1
D116,117	1SS131	Diode (Si)		2
D200A,200B ,200C	PQVDS1YB40F1	Diode (Si)	⚠	3
D201A,201B ,201C	PQVDHZS2B1	Diode (Si)	⚠	3
D202A-202C	Not Used			
D203A,203B ,203C,204A ,204B,204C	1SS131	Diode (Si)		6
D205A,205B ,205C,206A ,206B,206C	MA4047	Diode (Si)		6
D207A-209C	Not Used			
D210A,210B ,210C	1SS131	Diode (Si)		3
D300A-300H ,301A-301H	MA4047	Diode (Si)		16
D302A-302H ,303A-303H	1SS131	Diode (Si)		16
D304A-304H	Not Used			
D305A-305H ,306A-306H ,307A-307H	1SS131	Diode (Si)		24
D308A-308H	Not Used			
D309A-309H	Not Used			
D310A-310H ,311A-311H ,312A-312H	1SS131	Diode (Si)		24
D390	1SS131	Diode (Si)		1
D701	1SS131	Diode (Si)		1
D902,903	1SS131	Diode (Si)		2
		(VARISTORS)		
ZNR20A,20B ,20C	ERZC07DK820	Varistor	⚠	3
ZNR30A-30H ,31A-31H	ERZC03DK241	Varistor		16
ZNR32A-32H	ERZC07DK820	Varistor		8
SA20A,20B ,20C,21A ,21B,21C	PQVDDSS301L	Surge Absorber	⚠	6
SA22A,22B ,22C	PQVDSAE310F1	Surge Absorber		3
		(CRYSTAL OSCILLATORS)		
X100	PQVCK6000N3Z	Crystal Oscillator		1
X101	PQVCX3579H5R	Crystal Oscillator	S	1
X102	PQVCX4000N8Z	Crystal Oscillator	S	1
X103	PQVCL3276N4Z	Crystal Oscillator		1
		(COMPONENT COMBINATIONS)		
Z100,101 ,102	EXBP88473K	Resistor Array	S	3
Z107	PQRS8B3223J	Resistor Array		1
Z110	EXBP88222K	Resistor Array	S	1
		(COILS)		
L100-103	ELEPK820KA	Choke Coil	S	4
L104	PQLQZM2R2K	Choke Coil	S	1
L105-109	Not Used			
L110,111 ,120	PQLQZM2R2K	Choke Coil	S	3

Ref. No.	Part No.	Part Name & Description		Pcs
L173	PQLQZM2R2K	Choke Coil	S	1
L300B-300H ,301A-301H ,302A-302H ,303A-303H	PQLQZM2R2K	Choke Coil	S	31
L200A,200B ,200C,202A ,202B,202C	PQLQZK101K	Choke Coil	⚠	6
L201A,201B ,201C,203A ,203B,203C	PQLQZK2R2K	Choke Coil	⚠	6
L300A	PQLQZM2R2K	Choke Coil	S	1
L304	ELEA100KA	Choke Coil		1
		(TRANSFORMERS)		
T100,101	PQLT2D6B	Interface Transformer		2
T200A,200B ,200C	ETA14Y85AY	Interface Transformer	⚠	11
,300A-300H T301A-301H	ETE13K38AY	Pulse Transformer		8
		(SWITCHES)		
SW100	PQSH1A12Z	Switch, Reset		1
SW101	PQSS2A20Z	Switch, System Program		1
		(RELAYS)		
RLY10A,10B ,10C	PQSL49Z	Relay		3
RLY30A-30H	PQSL41Z	Relay		8
		(VARIABLE CAPACITOR)		
VC100	PQCVTZB30B	Trimmer		1
		(THERMISTORS)		
TH1	PQRRTS104U	Thermistor		1
TH2	PQRRTS203U	Thermistor		1
		(PHOTO ELECTIC TRANSDUCERS)		
PC200A ,200B,200C	PQVITLP520	Photo Coupler	⚠	3
PC201A ,201B,201C	PQVITLP627	Photo Coupler	⚠	3
PC202A ,202B,202C	PQVITLP521	Photo Coupler	S ⚠	3
		(CAPACITORS)		
C101	ECEA1EU101	100		1
C102-106	Not Used			
C107	ECQM1H472JV	0.0047		1
C108,109	Not Used			
C110,111	ECKD1H103KB	0.01	S	2
C112,113	ECCD1H150JC	15P	S	2
C114,115	ECCD1H220JC	22P		2
C116,117	Not Used			
C118	ECEA1HU100	10		1
C119,120	Not Used			
C121	ECKD1H223MD	0.022	S	1
C122,123	ECQV1H104JZ	0.1		2
C124	ECKD1H103KB	0.01	S	1
C125,126 ,127	ECQV1H104JZ	0.1		3
C128-129	Not Used			
C130	ECKD1H102JA	0.001	S	1
C131-134	Not Used			
C135	ECKD1H223MD	0.022	S	1
C136	ECUV1H223MD	0.022	S	1
C138	ECUV1H223MD	0.022	S	1

Ref. No.	Part No.	Part Name & Description		Pcs
C139	ECKD1H223MD	0.022	S	1
C140	Not Used			
C141	ECUV1H223MD	0.022		1
C142	ECQV1H104Z	0.1		1
C143	Not Used			
C144	ECUV1H223MD	0.022	S	1
C145-147	Not Used			
C148,149	ECUV1H223MD	0.022	S	2
C149	Not Used			
C150	ECUV1H223MD	0.022		1
C151,152	Not Used			
C153	ECCD1H151JC	150P	S	1
C154	Not Used			
C155	ECUV1H223MD	0.022	S	1
C156	ECKD1H223MD	0.022	S	1
C157-159	Not Used			
C160	ECKD1H223MD	0.022	S	1
C161	ECQV1H104JZ	0.1		1
C162	ECEA1EU101	100	S	1
C163	ECQV1H104JZ	0.1		1
C164-167	Not Used			
C168	ECEA1CSS332	3300		1
C169,170	ECEA1EK470	47		2
C171-179	Not Used			
C180	ECQV1H104JZ	0.1		1
C190	ECEA1HU2R2	2.2		1
C200A,200B ,200C	ECQE2E474KZ	0.47	⚠	3
C201A,201B ,201C	ECEA1HU220	22		3
C202A,202B ,202C	ECEA1HU100	10	⚠	3
C203A,203B ,203C	ECEA1HU220	22	⚠	3
C204A,204B ,204C	ECQV1H473MD	0.047		3
C205A,205B ,205C,206A ,206B,206C	ECUV1H563MD	0.056		6
C207A,207B ,207C	ECUV1H121JC	120P		3
C208A,208B ,208C	ECQM1H183JV	0.018		3
C209A,209B ,209C	ECUV1H183KB	0.018		3
C210A,210B ,210C,211A ,211B,211C	ECUV1H563MD	0.056		6
C212A,212B ,212C	ECUV1H121JC	120P		3
C220A,220B ,220C	ECKDKC222KB	0.0022	⚠	3
C221A,221B ,221C	ECKD1H102JA	0.001	S	3
C250	ECEA1EU102	1000		1
C300A-300G	ECEA1HU2R2	2.2		7
C300H	ECEA1HKS2R2	2.2		1
C301A-301H ,302A-302H	ECEA1HU3R3	3.3	S	16
C303A-303H	ECEA1HU4R7	4.7		8
C304A-304H ,305A-305H	ECUV1H103KB	0.01	S	16
C306A-306H	ECEA1HU010	1		8
C390	ECEA1EU101	100		1
C400	ECEA1VU471	470		1
C500-504	ECKD1H223MD	0.022	S	5
C511,512 ,513	ECQV1H273JZ	0.027		3
C711, 712	ECEA1HU4R7	4.7		2
C713	ECQV1H104JZ	0.1		1
C714	ECEA1HU100	10		1
C900	ECQV1H473JZ	0.047		1
C901	ECQV1H104JZ	0.1		1
C902	ECQM1H332JV	0.0033		1
C903	ECQV1H683JZ	0.068		1
C904	ECQV1H104JZ	0.1		1

Ref. No.	Part No.	Value		Pcs
C905	ECQM1H682JV	0.0068		1
C906,907	Not Used			
C908	ECQM1H222JV	0.0022		1
C909	ECKD1H102JA	0.001	S	1
C910,911	ECEA1HU4R7	4.7		2
C912	ECQV1H333JZ	0.033		1
C913	ECKD1H102JA	0.001	S	1
C914-916	Not Used			
C917	ECEA1EU470	47		1
C918	ECQM1H332JV	0.0033		1
C919	Not Used			
C920	ECKD1H681KB	680P		1
C921	ECCD1H151JC	150P	S	1
		(RESISTORS)		
R101	ERDS2TJ272	2.7k		1
R102-105	Not Used			
R106	ERDS2TJ821	820		1
R107-109	Not Used			
R110-118	ERDS2TJ151	150		9
R119-121	Not Used			
R122	ERDS2TJ103	10k		1
R123	ERDS2TJ223	22k		1
R124	Not Used			
R125	ERDS2TJ105	1M		1
R126	ERDS2TJ222	2.2k		1
R127,128	ERDS2TJ103	10k		2
R129	ERDS2TJ561	560		1
R130	ERDS2TJ681	680		1
R131	ERDS2TJ103	10k		1
R132	Not Used			
R133,134	ERDS2TJ473	47k		2
R135	Not Used			
R136	ERDS2TJ103	10k		1
R137	PQ4R18XJ223	22k		1
R138,139	Not Used			
R140	ERDS2TJ104	100k		1
R141	ERDS2TJ333	33k		1
R142	ERDS2TJ334	330k		1
R143	ERDS2TJ104	100k		1
R144	ERDS2TJ333	33k		1
R145	ERDS2TJ334	330k		1
R146	ERDS2TJ472	4.7k		1
R147	ERDS2TJ683	68k		1
R148,149	Not Used			
R150	ERDS2TJ102	1k		1
R151	ERDS2TJ333	33k		1
R152	ERDS2TJ223	22k		1
R153,154	ERDS2TJ102	1k		2
R155-158	ERDS2TJ103	10k		4
R159	PQ4R18XJ472	4.7k		1
R160	ERDS2TJ103	10k		1
R161	PQ4R18XJ472	4.7k		1
R162	ERDS2TJ103	10k		1
R163	PQ4R18XJ472	4.7k		1
R164	ERDS2TJ103	10k		1
R165-168	Not Used			
R169,170	ERDS2TJ223	22k		2
R171,172	Not Used			
R173	Not Used			
R174	ERDS2TJ225	2.2M		1
R175	ERDS2TJ154	150k		1
R176	ERDS2TJ223	22k		1
R177-184	Not Used			
R185	ERDS2TJ103	10k		1
R186-189	Not Used			
R190,191	ERDS2TJ103	10k		2
R192	ERDS2TJ102	1k		1
R193	Not Used			
R194,195	PQ4R18XJ472	4.7k		2
R196,197	PQ4R18XJ222	2.2K		2
R200A,200B ,200C	PQRD12TJ223	22k	S ⚠	3
R201A,201B ,201C	ERDS2TJ122	1.2k	⚠	3

Ref. No.	Part No.	Part Name & Description	Pcs
R202A,202B ,202C	ERDS2TJ104	100k ⚠	3
R203A,203B ,203C	ERDS2TJ472	4.7k ⚠	3
R204A,204B ,204C	ERDS2TJ5R6	5.6 ⚠	3
R205A-205C	Not Used		
R206A,206B ,206C	ERDS2TJ103	10k ⚠	3
R207A,207B ,207C	ERDS2TJ472	4.7k ⚠	3
R208A,208B ,208C	ERD25TJ390	39 S ⚠	3
R209A,209B ,209C	ERDS2TJ102	1k	3
R210A,210B ,210C	ERDS2TJ183	18k	3
R211A,211B ,211C	ERDS2TJ392	3.9k	3
R212A,212B ,212C	PQ4R18XJ122	1.2k	3
R213A,213B ,213C	PQ4R18XJ122	1.2k	3
R214A,214B ,214C	PQ4R18XJ391	390	3
R215A,215B ,215C	PQ4R18XJ122	1.2k	3
R216A,216B ,216C	ER016CKF1003	100k	3
R217A,217B ,217C	PQ4R18XF1003	100k	3
R218A,218B ,218C	PQ4R18XF3003	300k	3
R219A,219B ,219C ,220A,220B ,220C	ER016CKF3003	300k	6
R221A,221B ,221C,222A ,222B,222C ,223A,223B ,223C	ERDS2TJ122	1.2k	9
R224A,224B ,224C,225A ,225B,225C	ERDS2TJ471	470	6
R226A,226B ,226C	ERDS2TJ122	1.2k	3
R227A,227B ,227C,228A ,228B,228C	ER016CKF1003	100k	6
R229A,229B ,229C	ER016CKF3003	300k	3
R230A-230C	Not Used		
R231A,231B ,231C,232A ,232B,232C	ERDS2TJ473	47k	6
R233A,233B ,233C,234A ,234B,234C	ERDS2TJ473	47k	6
R235A,235B ,235C	ERDS2TJ683	68k	3
R300A, 300B	PQ4R18XJ220	22	2
R300C-300H	PQ4R18XJ220	22	6
R301A-301H	ERDS2TJ682	6.8k	8
R302A-302H	ERDS2TJ220	22	8
R303A-303H	ERDS2TJ682	6.8k	8
R304A-304H	Not Used		
R305A-305H	Not Used		
R306A-306H	Not Used		
R307A-307H	ERDS2TJ121	120	8
R308A-308H	ERDS2TJ121	120	8
R309A-309H	ERDS2TJ101	100	8
R310A-310H	ERDS2TJ222	2.2k	8
R311A-311H	ERDS2TJ472	4.7k	8
R312A-312H	ERDS2TJ3R3	3.3	8
R319A-319H	ERDS2TJ102	1k	8

Ref. No.	Part No.	Part Name & Description	Pcs
R320A-320H	PQRD2TJ102	1k	8
R330A-330H	Not Used		
R390	ERDS2TJ822	8.2K	1
R391,392	ERDS2TJ103	10k	2
R399	ERDS2TJ562	5.6k	1
R500,501 ,502	ER016CKF1151	1.15k	3
R503-510	ER016CKF49R9	49.9	8
R511,512	ER016CKF6491	6.49k	3
R514-521	ER016CKF1101	1.1k	8
R522,523	ER016CKF1151	1.15k	2
R701	ERDS2TJ821	820	1
R702	ERDS2TJ102	1k	1
R710	ERDS2TJ122	1.2k	1
R711	ERDS2TJ473	47k	1
R712,713	ERDS2TJ104	100k	2
R714	ER016CKF1104	1.1M	1
R715	ERDS2TJ122	1.2k	1
R716,717	ERDS2TJ473	47k	2
R900,901 ,902	ERDS2TJ104	100k	3
R903	ERDS2TJ224	220k	1
R904	ERDS2TJ124	120k	1
R905-911	Not Used		
R912,913 ,914	ERDS2TJ103	10k	3
R915-918	Not Used		
R919	ERDS2TJ123	12K	1
R920	ERDS2TJ103	10k	1
R921	ERDS2TJ563	56k	1
R922	ERDS2TJ102	1k	1
R923	ERDS2TJ223	22k	1
R924	ERDS2TJ273	27k	1
R925	ERDS2TJ681	680	1
R926	ERDS2TJ103	10k	1
R927	ERDS2TJ183	18k	1
R928	ERDS2TJ103	10k	1
R929	ERDS2TJ333	33k	1
R930	ERDS2TJ222	2.2k	1
R931	ERDS2TJ334	330k	1
R932,933	ERDS2TJ472	4.7k	2
R934,935	ERDS2TJ332	3.3k	2
R950	ERDS2TJ273	27k	1
R951	ERDS2TJ393	39k	1
R999	ERDS2TJ183	18k	1
		(OTHERS)	
E101	PQJJ1D3Z	Jack, External Music	1
E102	PQJJ1G1Z	Jack, Paging	1
E103	PQJJ1TA3Y	Jack,CO (MJ1A, MJ1B, MJ1C) ⚠	3
E104	PQJJ1TB16Z	Jack, Station Modular (MJ2A-2H)	8
E105	PQJP14D49Z	Connector Plug, 14P (CN7)	1
E106	PQJP2F4Z	Connector Plug, 2P	1
E107	PQJP4D14Z	Connector Plug, 4P (CN6)	1
E108	PQJP7G3Z	Connector Plug, 7P (CN5)	1
E109	PQJP8D3Z	Connector Plug, 8P (CN4)	1
E110	PQJP3D9Z	Connector Plug, 3P (CN8)	1
E111	PQJJ1TB25Y	Jack, (MJ3)	1

POWER REGULATOR BOARD PARTS

PCB2	PQWP230810M1	Power Regulator P.C. Board Ass'y (RTL)	1
		(ICs)	
IC1	AN78L18	I C S	1
IC2	Not Used		
IC3	AN78M12F	I C S	1
IC4,5	Not Used		
IC6	PQVIPD4069UC	I C S	1
IC7,8	AN78M15F	I C S	2

Ref. No.	Part No.	Part Name & Description		Pcs
		(TRANSISTORS)		
Q1	2SD1275	Transistor (Si)		1
Q2	2SD637	Transistor (Si)		1
Q3	2SD1406	Transistor (Si)		1
Q4,5	2SC2021	Transistor (Si)		2
Q6	DTC143XA	Transistor (Si)		1
Q7,8	2SD1406	Transistor (Si)		2
Q9,10	DTC144A	Transistor (Si)	S	2
		(DIODES)		
D1	PQVD2B4B41	Diode (Si)		1
D2A, 2B	PQVDD1NL20	Diode (Si)		2
D3,4	1SR35-200	Diode (Si)	S	2
D5	Not Used			
D6	MA1068	Diode (Si)	S	1
D7	MA4200	Diode (Si)		1
D8	Not Used			
D9,10,11	1SR35-200	Diode (Si)	S	3
D12	MA4091	Diode (Si)		1
D13	MA4062	Diode (Si)		1
D14,15	1SR35-200	Diode (Si)	S	2
D16	Not Used			
D17	1SR35-200	Diode (Si)	S	1
D18	MA4051	Diode (Si)		1
D19	1SS131	Diode (Si)		1
		(RELAY)		
RLY1	PQSL50Z	Relay		1
		(CAPACITORS)		
C3	EECW0H104Z1N	100000		1
C4	Not Used			
C5	ECET35S222SW	2200		1
C6	ECET50S682SW	6800		1
C7	ECET35S222SW	2200		1
C8	ECEA1HU101	100		1
C9	ECEA1VU471	470		1
C10	Not Used			
C11	ECEA1EU101	100		1
C12	Not Used			
C13	ECEA1EU331	330		1
C14	ECEA1HU100	10	S	1
C15,16	ECKD1H103KB	0.01		2
C17	ECEA1AU222	2200	S	1
C18	ECEA1HU100	10	S	1
C19	ECEA2AN100	10		1
C20	Not Used			
C21	ECEA1HU101	100		1
		(RESISTORS)		
R1	ERDS2TJ332	3.3k		1
R2	ERDS2TJ102	1k		1
R3	ERDS2TJ472	4.7k		1
R4	ERDS2TJ332	3.3k		1
R5	ERDS2TJ122	1.2k		1
R6	ERDS2TJ102	1k		1
R7	ERDS2TJ472	4.7k		1
R8	ERDS2TJ223	22k		1
R9,10	ERDS2TJ683	68k		2
R11,12	PQRD2VJ2R7	2.7		2
R13	ERDS2TJ102	1k		1
R14	Not Used			
R15	ERDS2TJ471	470		1
R16	ERDS2TJ472	4.7k		1
R17	ERDS2TJ223	22k		1
R18	ERDS2TJ473	47k		1
R19	ERDS2TJ332	3.3k		1
R20	ERDS2TJ822	8.2k		1
R21	ERDS2TJ274	270k		1

Pcs	Ref. No.	Part Name & Description	Pcs
R22,23,24	Not Used		
R25,26	ERDS2TJ272	2.7k	2
R27,28	ERDS2TJ223	22k	2
R29,30	PQRD1VJ3R3	3.3	2
R31	PQRD12TJ101	100	1
		(OTHERS)	
E1	XBA1C15NU100	Fuse (F2,F3)	2
E2	PQJP5D30Z	Connector Plug, 5P (CN1)	1
E3	PQJP5D48Z	Connector Plug, 5P (CN2)	1
E4	PQJP5D7Z	Connector Plug, 5P (CN3)	1
E5	PQJS7L30Z	Connector Socket, 7P (w/Lead) (J5)	1
E6	PQJS8L30Z	Connector Socket, 8P (w/Lead) (J4)	1
E7	PQJS3L32Z	Connector Socket, 3P (J8)	1
		LED BOARD PARTS	
PCB3	PQWP3T30810M	LED P.C. Board Ass'y (RTL)	1
		(DIODES)	
D800	LN220RPH	LED	1
D801	LN420YPH	LED	1
D802	LN320GPH	LED	1
		(OTHERS)	
E800	PQJS4R31Z	Connector Socket, 4P (w/Lead) (J6)	1
E801	PQHR402Z	Spacer, LED	1
		POWER SUPPLY PARTS	
PCB4	PQWP430810X1	Power P.C. Board Ass'y (RTL) (with/ C601,C602,C604,C605, ZNR600, L600, E603, E604 and E606)	1
		(CAPACITORS)	
C601,602	ECKDKC222KB	0.0022 S	2
C604,605	ECQU2A473MN	0.047	2
		(VARISTOR)	
ZNR600	ERZC14DK471U	Varistor	1
		(SWITCH)	
SW1	EST15704V	Switch, Power	1
SW2	PQSR4A03Z	Switch, Voltage Selector	1
		(TRANSFORMERS)	
T1	PQLT5M9X4A	Power Transformer	1
T2	PQLT1K9M1A	Bell Transformer	1
		(COIL)	
L600	PQLE61	Coil	1
		(OTHERS)	
E600	PQWAT616BX	Power Cord Assembly	1
E601	PQUV36Y	Power Box Cover	1
E602	PQUV37Y	Power Box	1
E603	PQJP7C1Z	Connector Plug, 7P	1
E604	PQJS5L30Z	Connector Socket, 7P (w/Lead) (J3)	1
E605	PQMD4012Z	Bracket, Power Box	1
E606	XBA2F15NU2	Fuse	1
E607	PQQT4181Z	Label	1
E608	RUV184Z	Cover, Voltage Selector Switch	1

ORDER NO. KM48808739C1
F5

Service Manual

EASA-PHONE

ELECTRONIC MODULAR SWITCHING SYSTEM

KX-T30810-1

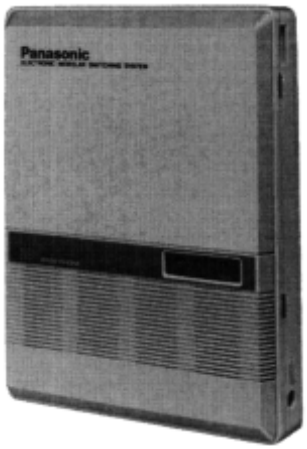

SPECIFICATIONS/ТЕХНИЧЕСКИЕ ХАРАКТЕРИСТИКИ
NAME AND LOCATION/НАИМЕНОВАНИЕ И РАСПОЛОЖЕНИЕ
CONNECTION/ПОДСОЕДИНЕНИЕ
PROGRAMMING/ПРОГРАММИРОВАНИЕ
IC I/O DATA/ЦОКОЛЕВКА И ФУНКЦИОНАЛЬНОЕ НАЗНАЧЕНИЕ ВЫВОДОВ МИКРОСХЕМ
ADJUSTMENTS/РЕГУЛИРОВКИ
BLOCK DIAGRAM/БЛОК-СХЕМА
SCHEMATIC DIAGRAMS/ПРИНЦИПИАЛЬНЫЕ СХЕМЫ
WIRING CONNECTION DIAGRAM/СХЕМА СОЕДИНЕНИЙ
IC BLOCK DIAGRAM/БЛОК-СХЕМА ИНТЕГРАЛЬНЫХ МИКРОСХЕМ
TERMINAL GUIDE OF IC`s, TRANSISTORS AND DIODES/ЦОКОЛЕВКА ИНТЕГРАЛЬНЫХ СХЕМ, ТРАНЗИСТОРОВ И ДИОДОВ
EXPLODED VIEW/СБОРОЧНЫЙ ЧЕРТЕЖ
ACCESSORIES AND PACKING MATERIALS/ПРИНАДЛЕЖНОСТИ И УПАКОВОЧНЫЕ МАТЕРИАЛЫ
REPLACEMENT PARTS LIST/СПИСОК ЗАПАСНЫХ ЧАСТЕЙ

Panasonic

Matsushita Services Company
50 Meadowland Parkway,
Secaucus, New Jersey 07094

Panasonic Hawaii Inc.
99-859 Iwaiwa Street
P.O. Box 774
Honolulu, Hawaii 96808-0774

Matsushita Electric of Canada Limited
5770 Ambler Drive, Mississauga,
Ontario, L4W 2T3

Panasonic Sales Company, Division of Matsushita Electric of Puerto Rico, Inc.
Ave. 65 De Infanteria, KM 9.7
Victoria Industrial Park
Carolina, Puerto Rico 00630

SPECIFICATIONS

General Description

1. Capacity	Outsides (CO)	3	
	Stations	8	
2. Control Method	Stored Program CPU: 8 bits CPU, 4 bits CPU Control ROM: 48 KB, Control RAM: 8 KB		
3. Switching	Space Division CMOS Crosspoint Switch		
4. Power Supplies	Primary	AC 120 V 60 Hz	
	Secondary	Station Supply Volt: +26 V, Circuit Volt: +5 V, +12 V, +18 V, +26 V	
	Power Failure	●3 outsides assigned to stations (1 through 3) ...power failure transfer ●System operation for 4 hours by optional Backup Adaptor.	
5. Dialing	Outward	Dial Pulse	10PPS
		Tone Dial	
	Internal	Dial Pulse	10PPS, 20PPS
		Tone Dial	
	Mode Conversion	DP-DTMF, DTMF-DP	
6. Connector	Outsides (CO)	Modular Jack (RJ-11)	
	Station	Modular Jack	
	Paging Output	Pin Jack (PCA JACK)	
	External Music Input	two-conductors Jack (MINI JACK 9/64 inch diameter)	
7. EXT Connection	Cable	1 pair wire (Standard Telephone) 2 pair wire (KX-T30830/KX-T30820)	
8. Intercom Paths	3		
9. Dimensions	334 (W)×437 (H)×107 (D) mm (13 9/32"×17 7/32"×4 7/32")		
10. Weight	5 kg (11 lb 0.4 oz)		
11. Power Consumption	40 W (Max.)		

Characteristics

1. Station Loop Limit	KX-T30830/KX-T30820	40 ohms
	Standard Telephone	600 ohms including set
	Doorphone	20 ohms
2. Minimum Leak Resistance	15,000 ohms	
3. Maximum Number of Station Instruments per Line	1 (KX-T30830 or KX-T30820) or 3 (Standard telephone)	
4. Ring Voltage	90 Vrms at 20 Hz depends on Ringing Load	
5. Primary Power	120 Vac, 60 Hz, 0.4 A maximum	
6. Central Office Loop Limit	1600 ohms maximum	
7. Environmental Requirements	0–40°C, 10%–90%	
8. Hookswitch Flash Timing Range	204–1000 msec	

Design and specifications are subject to change without notice.

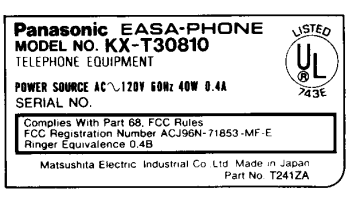

(Model KX-T30810)

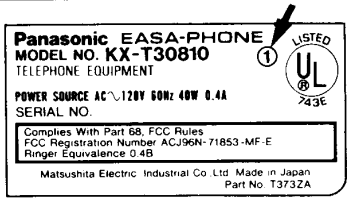

(Model KX-T30810-1)

1. There are 2 types of model KX-T30810, such as KX-T30810 and KX-T30810-1.
2. The model KX-T30810-1, have a mark ① on the name plate in figure left.
3. Please use this manual for model KX-T30810-1.

NAME AND LOCATION

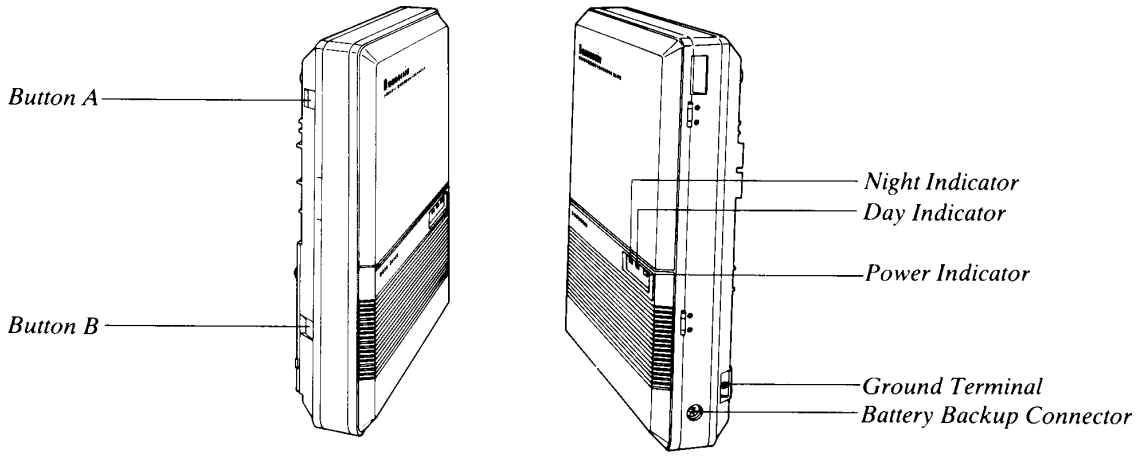

Fig. 3

Push Buttons A and B simultaneously to open Front Cover.

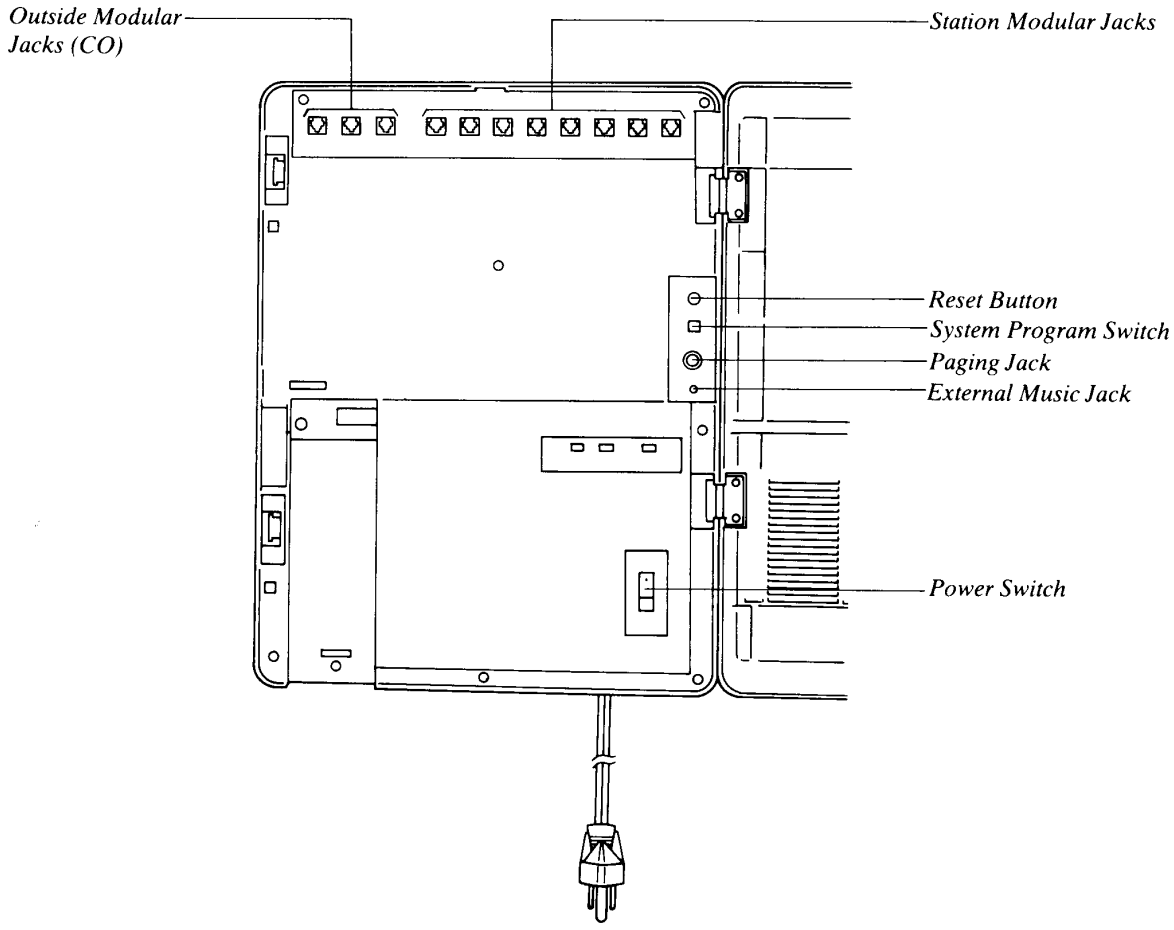

Fig. 4

CONNECTION

Cautions

1. *Do not wire the telephone cable in parallel with the AC power source, computer, telex, etc. If the cables run near those wires, shield the cables with metal tube or use shield cables and ground the shields.*

2. *When cables run on the floor, use protectors or the like to protect the wires where they may be stepped on. Avoid wiring under carpets.*

3. *Avoid using the same AC 120 V power supply outlet for computers, telexes, and other office equipment.*
Otherwise, KX-T30810 system operation may be interrupted by the induction noise from such equipments.

4. *Please use one pair telephone wire for extension connection of (telephone) equipments such as standard telephone, data terminal, answering machine, computer, etc., except proprietary telephone KX-T30830, KX-T30820, KX-T30850 etc.).*

After all the connections are completed, turn the Power Switch ON.

If an extension does not operate properly (for example: The LCD of the KX-T30830 does not display properly.), disconnect the telephone from the extension line and then connect again, or turn OFF the power switch of the KX-T30810 and then ON again after 5 minutes.

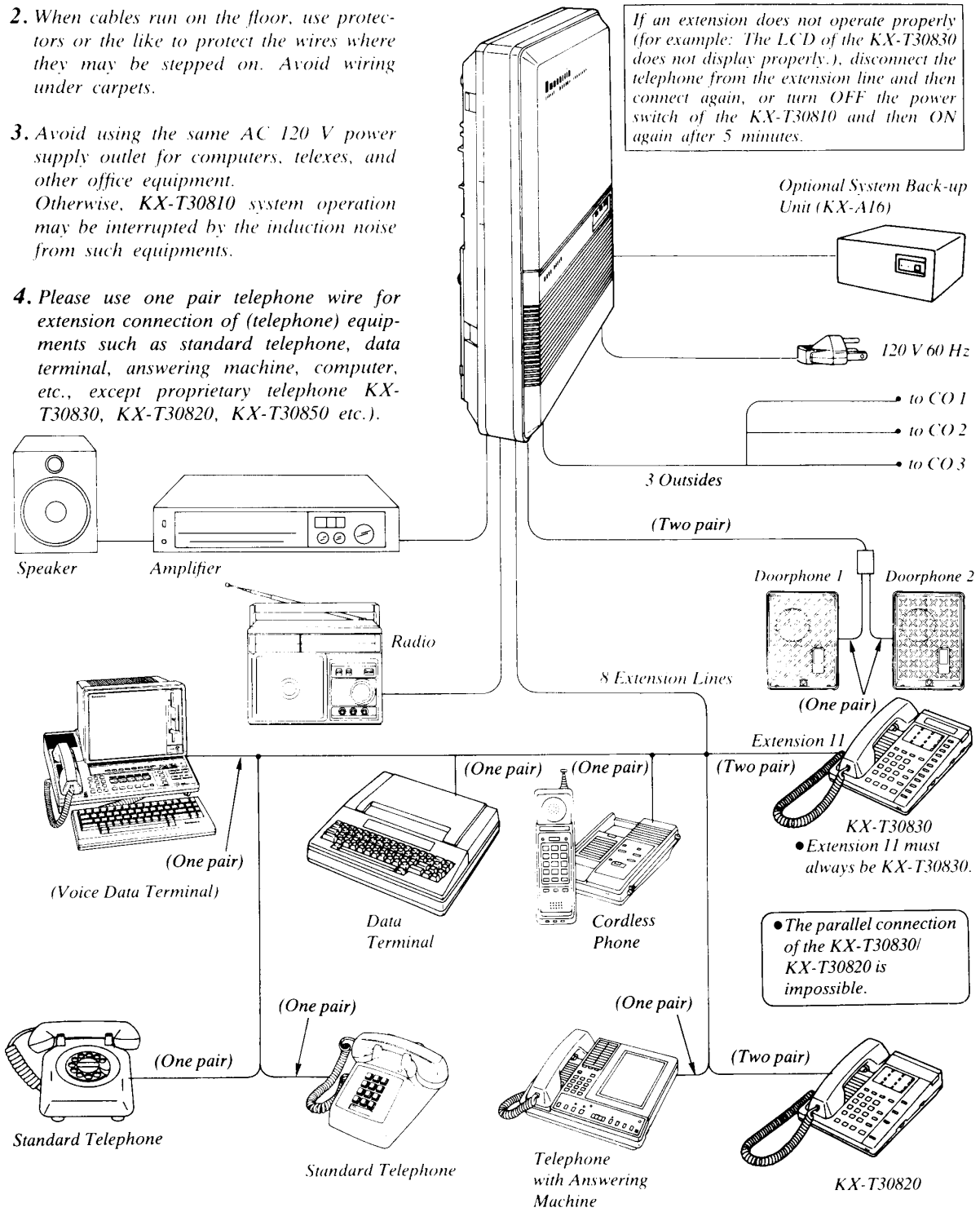

Fig. 5

PROGRAMMING

Programming Instructions

1. *At extension 11:*
All system programming changes (example: system clear, station program clear, toll restriction, hookswitch flash timing...) are done through extension 11.

> ***•Extension 11 must always be a Panasonic model, KX-T30830.***

2. *System Program Switch setting:*
The System Program Switch located on the KX-T30810 must be set to the PROGRAM position while making program changes. After all programming changes are completed, return the program switch to the SET position.

3. *Overlay:*
This overlay is used for programming the system and the program function names on buttons are inscribed on this card. Refer to page 7.

4. *Before system programming, you may operate system clear and station program clear to set default data of programming.*

A. System Clear:
1 Dial (99).
•"SYSTEM CLEAR" will be displayed.
2 Press the NEXT button.
•"ALL CLEAR?" will be displayed.
3 Press the MEMORY button to clear system.
4 To exit from system clear, press the END button.

The following features are preset as the default data.
Date and Time
System Speed Calling
CO Connection Assignment
Dial Mode (Tone/Pulse) Selection
Switching Mode (Day/Night Service)
Starting Time (Day/Night Service)
Flexible Day Outward Dialing Assignment
Flexible Night Outward Dialing Assignment
Flexible Day Ringing Assignment
Flexible Night Ringing Assignment
Toll Restriction—Class Assignment
Toll Restriction—Area Code Selection
Programmable Operator Call
Host PBX Access Codes Assignment
Automatic Answering (Automatic/Manual) Selection
Preferred Line Assignment
Programmable Call Waiting
Duration Time Count Start Mode
Hookswitch Flash Timing
Disconnect Time
Calling Party Control (CPC) Signal
Intercom Alerting Mode
Programmable Doorphone
Dial Call Pickup Group Assignment
Busy Tone Selection
Hold Time Reminder
Hold Recall Time Set
Programmable External Paging Access Tone
DTMF Receiver
Programmable Toll Prefix
Programmable Secret Auto Dial

B. Station Program Clear:
1 Dial (98).
•"EXT CLEAR" will be displayed.
2 Press the NEXT button.
•"ALL CLEAR?" will be displayed.
3 Press the MEMORY button to clear the system.
4 To exit from station clear, press the END button.

The following features are preset as the default data.
One Touch Dialing
Background Music
Call Forwarding
Data Line Security
Dial Call Pickup Deny
Do not Disturb

When the System Program Switch on the KX-T30810 is set to the PROGRAM position, the operation of the KX-T30830 will change as follows.

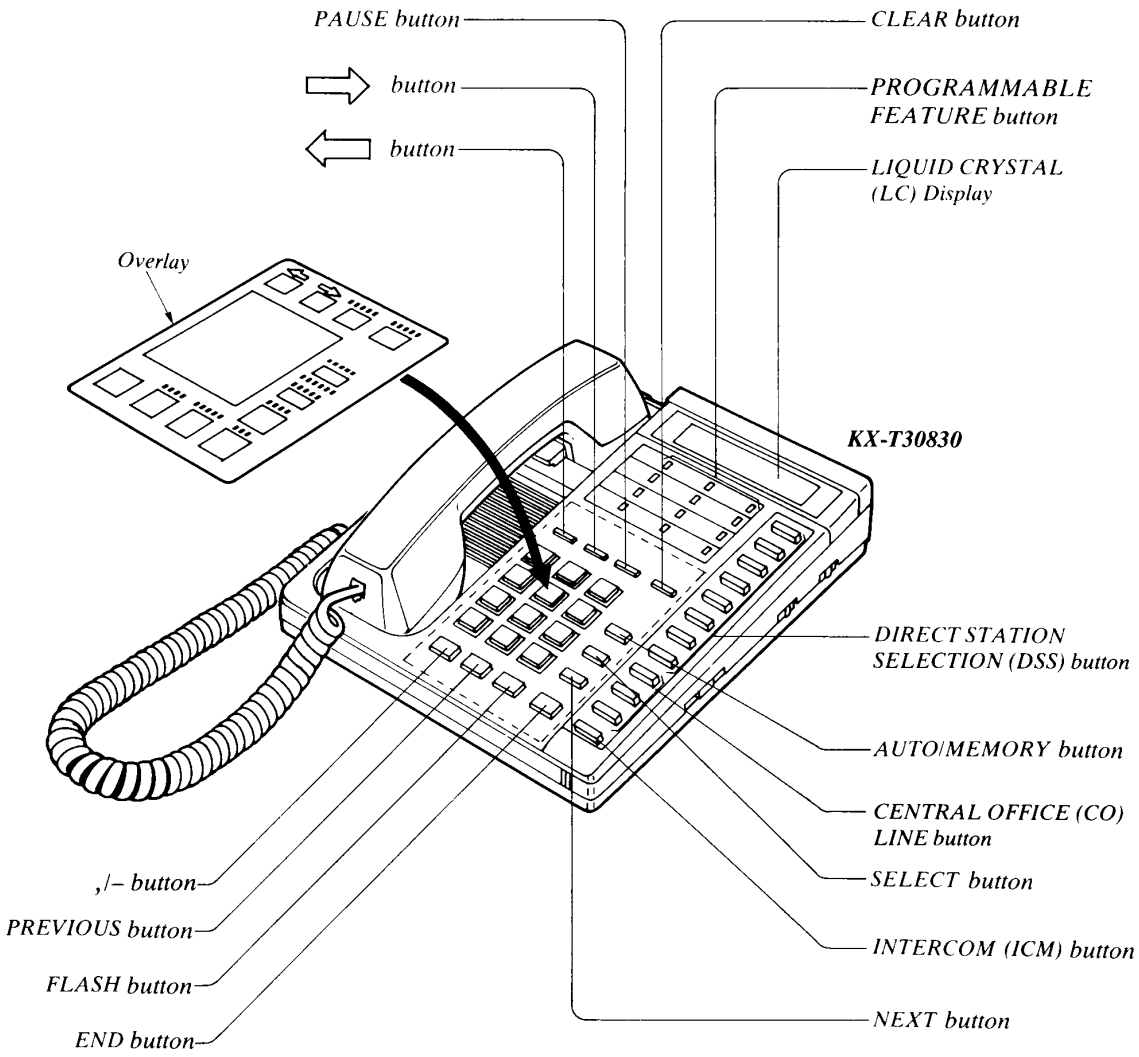

Fig. 6

Notes: 1. For details of installation, refer to the Installation Manual (Part No. PQQX5289Z).
2. For details of operation, refer to the User Guide (Part No. PQQX5291Z).

Example of Programming

1. Turn the Power Switch to ON .....

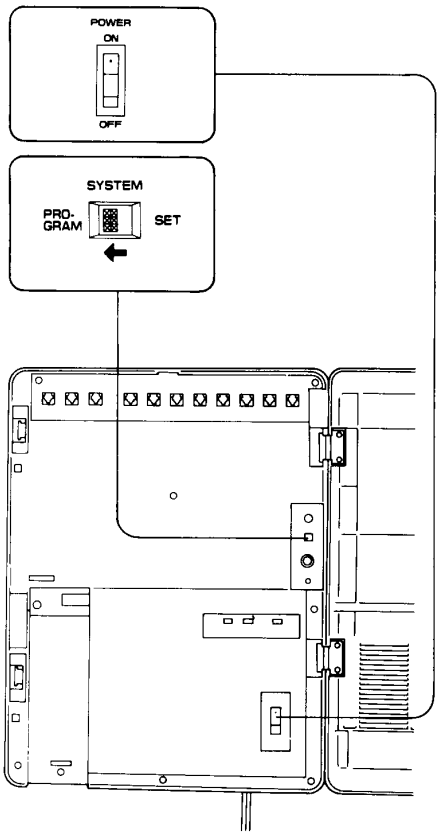

2. Set the System Program Switch to PROGRAM .....
The LCD on the KX-T30830 shows "ENTER PGM CODE".
- *Be sure the handset of the extension 11 is in the cradle and the speakerphone button of the extension 11 is off.*

3. To program automatic line access number 9 and the phone number 987-654-3210 into memory location (speed dial access) number 00.

	KX-T30830 at extension 11 (Extension 11 must always be KX-T30830.)	
1.	*Dial (01) or press the AUTO button.*	*Display* [*SPEED CALLING*]
2.	*Press the NEXT button.*	[*ENTER SPEED CODE*]
3.	*Dial (00) or press the NEXT button.*	• *If nothing is stored in access code "00",* [*00: NOT STORED*] • *If already stored the automatic line access number 9 and the phone number 123-456-7890,* [*00: -123-456-7890*]
4.	① *Dial "9".* ② *Press "—" button.* ③ *Dial "987".* ④ *Press "—" button.* ⑤ *Dial "654".* ⑥ *Press "—" button.* ⑦ *Dial "3210".*	[*00: -987-654-3210*]
5.	*Press the MEMORY button.*	[*00: -987-654-3210*]
6.	• *To program a next access code, press the NEXT button.* • *To program a desired access code, press the SELECT button and then dial the number.*	
7.	*Repeat step 4 to 6.*	
8.	*To return to the initial program mode, press the END button.*	[*ENTER PGM CODE*]

4. Return the System Program Switch to SET

■ *To make program change, start from the beginning.*

While programming if a mistake is made,

1. Press the "END" button.

2. Start programming procedure from the beginning.

- *You will hear the beeps after press the MEMORY button.*
- *The MEMORY indicator light goes on when the MEMORY button is pressed, and then Indicator light goes out when the NEXT or PREV button is pressed.*

■ PROGRAMMING TABLE

<table>
<tr><th>TO SET</th><th>PROGRAM ADDRESS</th><th>STEPS REQUIRED TO CHANGE PROGRAM</th></tr>
<tr><td>Date and Time</td><td>[00]</td><td>[NEXT] [A] [⇨] [SELECT] [⇨] [B] [⇨] [SELECT] [⇨] [C] [⇨] [D] [⇨] [SELECT] [MEMORY] [END]
└ year └ month └ day └ day of the week └ hour └ minute └ AM/PM</td></tr>
<tr><td>System Speed Calling Entry</td><td>[01]
or
[AUTO]</td><td>[NEXT] [AB] [CD] [phone number] [MEMORY]
└ [9]: automatic line access number
└ [81] through [83]: outside line access number
└ speed access code
• To advance to the next code.
[SELECT] [AB] [CD] [phone number] [MEMORY]
• To exit the speed calling entry, press [END].</td></tr>
<tr><td>CO Connection Assignment</td><td>[02]</td><td>[NEXT] [NEXT] [SELECT] [MEMORY] [END]
└ CONNECT/NO CONNECT
└ until the desired CO number appears
<table>
<tr><th></th><th>Default</th><th colspan="3">To make program change</th></tr>
<tr><td>CO(s)</td><td>all CO's</td><td>1</td><td>2</td><td>3</td></tr>
<tr><td>Connect</td><td>×</td><td></td><td></td><td></td></tr>
<tr><td>No connect</td><td></td><td></td><td></td><td></td></tr>
</table></td></tr>
<tr><td>Dial Mode (Tone/Pulse) Selection</td><td>[03]</td><td>[NEXT] [NEXT] [SELECT] [MEMORY] [END]
└ TONE/PULSE
└ until the desired CO number appears
<table>
<tr><th></th><th>Default</th><th colspan="3">To make program change</th></tr>
<tr><td>CO(s)</td><td>all CO's</td><td>1</td><td>2</td><td>3</td></tr>
<tr><td>Tone (DTMF) mode</td><td>×</td><td></td><td></td><td></td></tr>
<tr><td>Pulse mode</td><td></td><td></td><td></td><td></td></tr>
</table></td></tr>
<tr><td>Switching Mode (Day/Night Service)</td><td>[04]</td><td>[NEXT] [SELECT] [MEMORY] [END]
└ MAN/AUTO
<table>
<tr><th></th><th>Default</th><th>To make program change</th></tr>
<tr><td>Manual</td><td>×</td><td></td></tr>
<tr><td>Automatic</td><td></td><td></td></tr>
</table></td></tr>
<tr><td>Starting Time (Day/Night Service)</td><td>[05]</td><td>[NEXT] [A] [⇨] [B] [⇨] [SELECT] [MEMORY] [NEXT] [C] [⇨] [D] [⇨] [SELECT] [MEMORY] [END]
└ minute └ AM/PM └ starting time for day service (hour)
└ minute └ AM/PM └ starting time for night service (hour)
<table>
<tr><th></th><th>Default</th><th>To make program change</th></tr>
<tr><td>Day plan</td><td>9:00 AM</td><td></td></tr>
<tr><td>Night plan</td><td>5:00 PM</td><td></td></tr>
</table></td></tr>
<tr><td>Flexible Day Outward Dialing Assignment</td><td>[06]</td><td>[NEXT] [NEXT] [C...E] [MEMORY] [END]
└ CO number
└ until the desired extension number appears
<table>
<tr><th></th><th>Default</th><th colspan="8">To make program change</th></tr>
<tr><td>Extensions</td><td>all extensions</td><td>11</td><td>12</td><td>13</td><td>14</td><td>15</td><td>16</td><td>17</td><td>18</td></tr>
<tr><td>CO 1</td><td>×</td><td></td><td></td><td></td><td></td><td></td><td></td><td></td><td></td></tr>
<tr><td>CO 2</td><td>×</td><td></td><td></td><td></td><td></td><td></td><td></td><td></td><td></td></tr>
<tr><td>CO 3</td><td>×</td><td></td><td></td><td></td><td></td><td></td><td></td><td></td><td></td></tr>
</table></td></tr>
<tr><td>Flexible Night Outward Dialing Assignment</td><td>[07]</td><td>[NEXT] [NEXT] [C...E] [MEMORY] [END]
└ CO number
└ until the desired extension number appears
<table>
<tr><th></th><th>Default</th><th colspan="8">To make program change</th></tr>
<tr><td>Extensions</td><td>all extensions</td><td>11</td><td>12</td><td>13</td><td>14</td><td>15</td><td>16</td><td>17</td><td>18</td></tr>
<tr><td>CO 1</td><td>×</td><td></td><td></td><td></td><td></td><td></td><td></td><td></td><td></td></tr>
<tr><td>CO 2</td><td>×</td><td></td><td></td><td></td><td></td><td></td><td></td><td></td><td></td></tr>
<tr><td>CO 3</td><td>×</td><td></td><td></td><td></td><td></td><td></td><td></td><td></td><td></td></tr>
</table></td></tr>
</table>

TO SET	PROGRAM ADDRESS	STEPS REQUIRED TO CHANGE PROGRAM
Flexible Day Ringing Assignment	[08]	[NEXT] [NEXT] [C...E] [MEMORY] [END] └ *CO number* └ *until the desired extension number appears*
Flexible Night Ringing Assignment	[09]	[NEXT] [NEXT] [C...E] [MEMORY] [END] └ *CO number* └ *until the desired extension number appears*
Toll Restriction—Class Assignment	[10]	[NEXT] [NEXT] [SELECT] [MEMORY] [END] └ *CLASS 1/2/3/4* └ *until the desired extension number appears*
Toll Restriction—Area Code Selection	[11]	[NEXT] [NEXT] [C] [MEMORY] [END] └ *area code with 3 digits* └ *until the desired memory location number appears*
Programmable Operator Call	[12]	[NEXT] [NEXT] [SELECT] [MEMORY] [END] └ *ENABLE/DISABLE* └ *until the desired extension number appears*
Host PBX Access Codes Assignment	[13]	[NEXT] [NEXT] [A...D] [MEMORY] [END] └ *up to four outside access codes each with a maximum of 2 digits* └ *until the desired CO numbers appears*
Automatic Answering (Automatic/Manual) Selection	[14]	[NEXT] [NEXT] [SELECT] [MEMORY] [END] └ *AUTO ANSWER/MAN ANSWER* └ *until the desired extension number appears*

Extensions	Default: all extensions	To make program change: 11	12	13	14	15	16	17	18
CO 1	×								
CO 2	×								
CO 3	×								

Extensions	Default: all extensions	To make program change: 11	12	13	14	15	16	17	18
CO 1	×								
CO 2	×								
CO 3	×								

Extensions	Default: all extensions	To make program change: 11	12	13	14	15	16	17	18
Class 1 (all calls)	×								
Class 2 (toll calls, local calls)									
Class 3 (selected area-codes, local calls)									
Class 4 (local calls)									

	Memory location number: 00	01	02	03	04	05	06	07	08	09
Area code entry										

Extensions	Default: all extensions	To make program change: 11	12	13	14	15	16	17	18
Enable	×								
Disable									

CO	Outside access codes of the host PBX			
1				
2				
3				

Extensions	Default: all extensions	To make program change: 11	12	13	14	15	16	17	18
Automatic	×								
Manual									

TO SET	PROGRAM ADDRESS	STEPS REQUIRED TO CHANGE PROGRAM
Preferred Line Assignment	[15]	[NEXT] [NEXT] [SELECT] [MEMORY] [END] └ - - - - - • • • • *(none)/CO 1/CO 2/CO 3* └ - - - *until the desired extension number appears*

	Default	To make program change							
Extensions	*all extensions*	*11*	*12*	*13*	*14*	*15*	*16*	*17*	*18*
• • • • *(none)*	×								
CO1									
CO2									
CO3									

Programmable Call Waiting	[16]

[NEXT] [NEXT] [SELECT] [MEMORY] [END]
└ - - - - - - - *ENABLE/DISABLE*
└ - - *until the desired extension number appears*

	Default	To make program change							
Extensions	*all extensions*	*11*	*12*	*13*	*14*	*15*	*16*	*17*	*18*
Disable	×								
Enable									

Duration Time Count Start Mode	[17]

[NEXT] [SELECT] [MEMORY] [END]
└ - - - *INSTANTLY/5S AFTER DIAL/10S AFTER DIAL*

	Default	To make program change
Instantly		
5S after dial	×	
10S after dial		

Hookswitch Flash Timing	[18]

[NEXT] [NEXT] [SELECT] [MEMORY] [END]
└ - - - - *300 MS/600 MS/900 MS*
└ - - - - - *until the desired CO number appears*

	Default	To make program change		
CO(s)	*all CO's*	*1*	*2*	*3*
300 msec				
600 msec	×			
900 msec				

Disconnect Time	[19]

[NEXT] [NEXT] [SELECT] [MEMORY] [END]
└ - - - - *1.5 SEC/4.0 SEC*
└ - - *until the desired CO number appears*

	Default	To make program change		
CO(s)	*all CO's*	*1*	*2*	*3*
1.5 sec	×			
4.0 sec				

Calling Party Control (CPC) Signal	[20]

[NEXT] [NEXT] [SELECT] [MEMORY] [END]
└ - - - - - *ENABLE/DISABLE*
└ - - *until the desired CO number appears*

	Default	To make program change		
CO(s)	*all CO's*	*1*	*2*	*3*
Enable	×			
Disable				

Intercom Alerting Mode	[21]

[NEXT] [NEXT] [SELECT] [MEMORY] [END]
└ - - - - *TONE CALL/VOICE CALL*
└ - - - *until the desired extension number appears*

	Default	To make program change							
Extensions	*all extensions*	*11*	*12*	*13*	*14*	*15*	*16*	*17*	*18*
Tone call	×								
Voice call									

Programmable Doorphone	[22]

[NEXT] [NEXT] [SELECT] [MEMORY] [END]
└ - - - *D-PHONE 1, 2/1/2/ • • • (deny the ringing)*
└ - - *until the desired extension number appears*

	Default	To make program change							
Extensions	*all extensions*	*11*	*12*	*13*	*14*	*15*	*16*	*17*	*18*
Doorphone 1	×								
Doorphone 2	×								
deny the ringing									

<table>
<tr><th>TO SET</th><th>PROGRAM ADDRESS</th><th>STEPS REQUIRED TO CHANGE PROGRAM</th></tr>
<tr><td>Dial Call Pickup Group Assignment</td><td>[23]</td><td>[NEXT] [NEXT] [SELECT] [MEMORY] [END]
└-------- PICKUP-G:1/2/1, 2/• • • (out of the group)
└--- until the desired extension number appears
<table>
<tr><th></th><th>Default</th><th colspan="8">To make program change</th></tr>
<tr><td>Extensions</td><td>all extensions</td><td>11</td><td>12</td><td>13</td><td>14</td><td>15</td><td>16</td><td>17</td><td>18</td></tr>
<tr><td>Pickup Group 1</td><td>×</td><td></td><td></td><td></td><td></td><td></td><td></td><td></td><td></td></tr>
<tr><td>Pickup Group 2</td><td></td><td></td><td></td><td></td><td></td><td></td><td></td><td></td><td></td></tr>
<tr><td>out of the group</td><td></td><td></td><td></td><td></td><td></td><td></td><td></td><td></td><td></td></tr>
</table></td></tr>
<tr><td>Busy Tone Selection</td><td>[24]</td><td>[NEXT] [SELECT] [MEMORY] [END]
└----- TONE 1/2
<table>
<tr><th></th><th>Default</th><th>To make program change</th></tr>
<tr><td>Tone 1</td><td>×</td><td></td></tr>
<tr><td>Tone 2</td><td></td><td></td></tr>
</table></td></tr>
<tr><td>Hold Time Reminder</td><td>[25]</td><td>[NEXT] [SELECT] [MEMORY] [END]
└------ 1 MIN/2 MIN...../9 MIN
<table>
<tr><th></th><th colspan="9">minutes</th></tr>
<tr><th></th><th>1</th><th>2</th><th>3</th><th>4</th><th>5</th><th>6</th><th>7</th><th>8</th><th>9</th></tr>
<tr><td>Default</td><td></td><td></td><td>×</td><td></td><td></td><td></td><td></td><td></td><td></td></tr>
<tr><td>To make program change</td><td></td><td></td><td></td><td></td><td></td><td></td><td></td><td></td><td></td></tr>
</table></td></tr>
<tr><td>Hold Recall Time Set</td><td>[26]</td><td>[NEXT] [SELECT] [MEMORY] [END]
└------ 30 SEC/1 MIN/1.5 MIN/2 MIN/DISABLE
<table>
<tr><th></th><th>30 seconds</th><th>1 minute</th><th>1 minute 30 seconds</th><th>2 minutes</th><th>disable</th></tr>
<tr><td>Default</td><td>×</td><td></td><td></td><td></td><td></td></tr>
<tr><td>To make program change</td><td></td><td></td><td></td><td></td><td></td></tr>
</table></td></tr>
<tr><td>Programmable External Paging Access Tone</td><td>[27]</td><td>[NEXT] [SELECT] [MEMORY] [END]
└------ ENABLE/DISABLE
<table>
<tr><th></th><th>Default</th><th>To make program change</th></tr>
<tr><td>Enable</td><td>×</td><td></td></tr>
<tr><td>Disable</td><td></td><td></td></tr>
</table></td></tr>
<tr><td>DTMF Receiver Check</td><td>[28]</td><td>[NEXT] [SELECT] [MEMORY] [END]
└--- ENABLE/DISABLE
└-- until the desired DTMF receiver appears
<table>
<tr><th></th><th>Default</th><th colspan="2">To make program change</th></tr>
<tr><td>DTMF receiver</td><td>1, 2</td><td>1</td><td>2</td></tr>
<tr><td>Enable</td><td>×</td><td></td><td></td></tr>
<tr><td>Disable</td><td></td><td></td><td></td></tr>
</table></td></tr>
<tr><td>Programmable Toll Prefix</td><td>[29]</td><td>[NEXT] [SELECT] [MEMORY] [END]
└---- WITH 1/ WITHOUT 1
<table>
<tr><th></th><th>Default</th><th>To make program change</th></tr>
<tr><td>With 1</td><td>×</td><td></td></tr>
<tr><td>Without 1</td><td></td><td></td></tr>
</table></td></tr>
<tr><td>Programmable secret Auto Dial</td><td>[30]</td><td>[NEXT] [SELECT] [MEMORY] [END]
└-- NO SECRET/ SECRET
<table>
<tr><th></th><th>Default</th><th>To make program change</th></tr>
<tr><td>No secret</td><td>×</td><td></td></tr>
<tr><td>Secret</td><td></td><td></td></tr>
</table></td></tr>
<tr><td>Station Program Clear</td><td>[98]</td><td>[NEXT] [MEMORY] [END]</td></tr>
<tr><td>System Clear</td><td>[99]</td><td>[NEXT] [MEMORY] [END]</td></tr>
</table>

IC I/O DATA

IC100

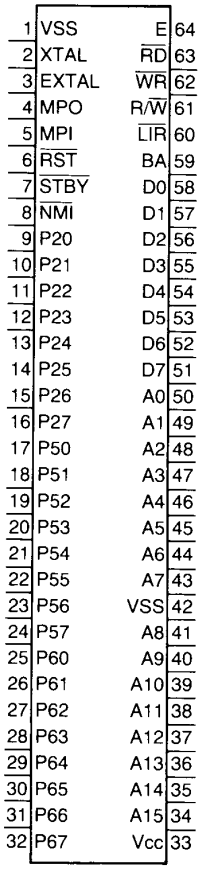

IC100

Port	Pin No.	I/O	Signal Name	High Imp.	High Level	Low Level	Remarks
NMI	8	I	CPU Restart	-----	-----	-----	
P20	9	I	CNCT1: Doorphone 1 Connect Detection	-----	Connect	Non-Connect	
P21	10	I	CNCT2: Doorphone 2 Connect Detection	-----	Connect	Non-Connect	
P22	11	I	DHK1: Doorphone 1 Connect Detection	-----	Off-Hook	On-Hook	
P23	12	I	DHK2: Doorphone 2 Connect Detection	-----	Off-Hook	On-Hook	
P26	15	I	DROP: Doorphone Adaptor Connect Detection	-----	Non-Connect	Connect	
P51	18	I	PFD: Power Failure Detection	-----	Power Failure	Normal	
P53	20	I	HALT: Halt Control Input	-----	Normal	Power Failure	
P54	21	I	TEST1	-----	Normal	Test Mode	
P55	22	I	TEST2	-----	Normal	Test Mode	
P56	23	I	STD1: DTMF Signal Detection 1	-----	Reception	Non-Reception	DTMF R1
P57	24	I	STD2: DTMF Signal Detection 2	-----	Reception	Non-Reception	DTMF R2
P63	28	O	20Hz: Ringing Signal Output	-----	-----	-----	
P64	29	O	PF: Power Failure Control	-----	Power Failure	Normal	
P65	30	O	20Hz: Ringing Signal Output	-----	-----	-----	
P66	31	O	BRK: EXT Over Current Protection	Break	On	Break	EXT11-18

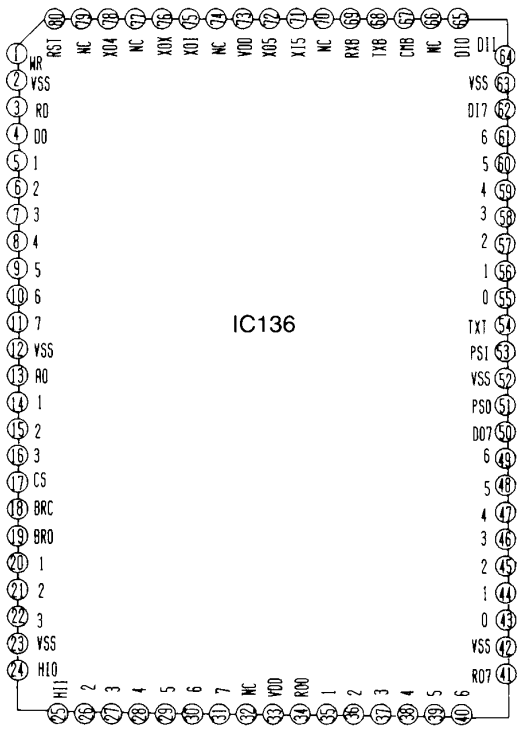

IC136

Port	Pin No.	I/O	Signal Name	High Imp.	High Level	Low Level	Remarks
HI0	24	I	HK11: EXT Telephone Hook Detection	-----	On-Hook	Off-Hook	Pullup by 2.2kΩ
HI1	25	I	HK12: EXT Telephone Hook Detection	-----	On-Hook	Off-Hook	Pullup by 2.2kΩ
HI2	26	I	HK13: EXT Telephone Hook Detection	-----	On-Hook	Off-Hook	Pullup by 2.2kΩ
HI3	27	I	HK14: EXT Telephone Hook Detection	-----	On-Hook	Off-Hook	Pullup by 2.2kΩ
HI4	28	I	HK15: EXT Telephone Hook Detection	-----	On-Hook	Off-Hook	Pullup by 2.2kΩ
HI5	29	I	HK16: EXT Telephone Hook Detection	-----	On-Hook	Off-Hook	Pullup by 2.2kΩ
HI6	30	I	HK17: EXT Telephone Hook Detection	-----	On-Hook	Off-Hook	Pullup by 2.2kΩ
HI7	31	I	HK18: EXT Telephone Hook Detection	-----	On-Hook	Off-Hook	Pullup by 2.2kΩ
RO0	34	O	RG11: Extension Ring Relay Control	Bell Transmission		Non-Bell Transmission	
RO1	35	O	RG12: Extension Ring Relay Control	Bell Transmission		Non-Bell Transmission	
RO2	36	O	RG13: Extension Ring Relay Control	Bell Transmission		Non-Bell Transmission	
RO3	37	O	RG14: Extension Ring Relay Control	Bell Transmission		Non-Bell Transmission	
RO4	38	O	RG15: Extension Ring Relay Control	Bell Transmission		Non-Bell Transmission	
RO5	39	O	RG16: Extension Ring Relay Control	Bell Transmission		Non-Bell Transmission	
RO6	40	O	RG17: Extension Ring Relay Control	Bell Transmission		Non-Bell Transmission	
RO7	41	O	RG18: Extension Ring Relay Control	Bell Transmission		Non-Bell Transmission	
DO0	43	O	TXD11: EMSS TEL. Data Transmission	Non-Transmission		Transmission	
DO1	44	O	TXD12: EMSS TEL. Data Transmission	Non-Transmission		Transmission	
DO2	45	O	TXD13: EMSS TEL. Data Transmission	Non-Transmission		Transmission	
DO3	46	O	TXD14: EMSS TEL. Data Transmission	Non-Transmission		Transmission	
DO4	47	O	TXD15: EMSS TEL. Data Transmission	Non-Transmission		Transmission	
DO5	48	O	TXD16: EMSS TEL. Data Transmission	Non-Transmission		Transmission	
DO6	49	O	TXD17: EMSS TEL. Data Transmission	Non-Transmission		Transmission	
DO7	50	O	TXD18: EMSS TEL. Data Transmission	Non-Transmission		Transmission	
DI0	55	I	RXD11: EMSS TEL Reception Data	-----	Non-Data	Data	Pullup by 2.2kΩ
DI1	56	I	RXD12: EMSS TEL Reception Data	-----	Non-Data	Data	Pullup by 2.2kΩ
DI2	57	I	RXD13: EMSS TEL Reception Data	-----	Non-Data	Data	Pullup by 2.2kΩ
DI3	58	I	RXD14: EMSS TEL Reception Data	-----	Non-Data	Data	Pullup by 2.2kΩ
DI4	59	I	RXD15: EMSS TEL Reception Data	-----	Non-Data	Data	Pullup by 2.2kΩ
DI5	60	I	RXD16: EMSS TEL Reception Data	-----	Non-Data	Data	Pullup by 2.2kΩ
DI6	61	I	RXD17: EMSS TEL Reception Data	-----	Non-Data	Data	Pullup by 2.2kΩ
DI7	62	I	RXD18: EMSS TEL Reception Data	-----	Non-Data	Data	Pullup by 2.2kΩ

IC113

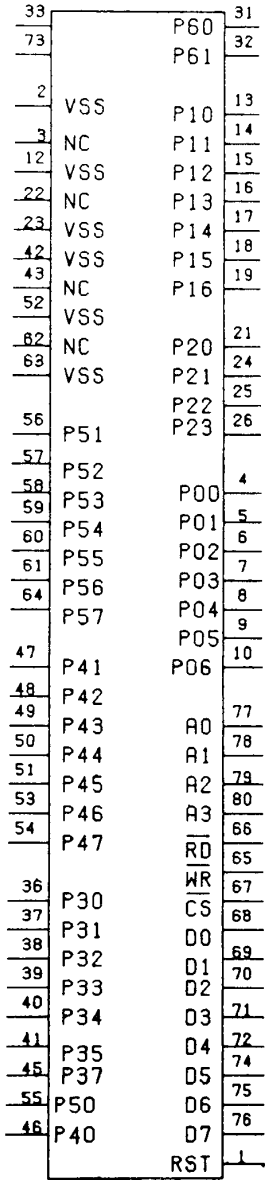
33
73
2
3
12
22
23
42
43
52
62
63
56
57
58
59
60
61
64
47
48
49
50
51
53
54
36
37
38
39
40
41
45
55
46
VSS
NC
VSS
NC
VSS
VSS
NC
VSS
NC
VSS
P51
P52
P53
P54
P55
P56
P57
P41
P42
P43
P44
P45
P46
P47
P30
P31
P32
P33
P34
P35
P37
P50
P40
P60
P61
P10
P11
P12
P13
P14
P15
P16
P20
P21
P22
P23
P00
P01
P02
P03
P04
P05
P06
A0
A1
A2
A3
RD
WR
CS
D0
D1
D2
D3
D4
D5
D6
D7
RST
31
32
13
14
15
16
17
18
19
21
24
25
26
4
5
6
7
8
9
10
77
78
79
80
66
65
67
68
69
70
71
72
74
75
76
1

IC113

Port	Pin No.	I/O	Signal Name	High Imp.	High Level	Low Level	Remarks
PO0	4	O	COL1: HD Signal Generator Control 1	-----	Active	In-Active	
PO1	5	O	COL2: HD Signal Generator Control 2	-----	Active	In-Active	
PO2	6	O	COL3: HD Signal Generator Control 3	-----	Active	In-Active	
PO3	7	O	ROW1: HD Signal Generator Row 1	-----	Active	In-Active	
PO4	8	O	ROW2: HD Signal Generator Row 2	-----	Active	In-Active	
PO5	9	O	ROW3: HD Signal Generator Row 3	-----	Active	In-Active	
PO6	10	O	ROW4: HD Signal Generator Row 4	-----	Active	In-Active	
P10	13	O	A: Cross Point Address	-----	Address High	Address Low	
P11	14	O	B: Cross Point Address	-----	Address High	Address Low	
P12	15	O	C: Cross Point Address	-----	Address High	Address Low	
P13	16	O	D: Cross Point Address	-----	Address High	Address Low	
P14	17	O	E: Cross Point Address	-----	Address High	Address Low	
P15	18	O	STB0: Cross Point Strobe	-----	Active	In-Active	
P16	19	O	STB1: Cross Point Strobe	-----	Active	In-Active	
P20	21	O	XD0: Cross Point Data	-----	Data High	Data Low	
P21	24	O	XD1: Cross Point Data	-----	Data High	Data Low	
P22	25	O	XD2: Cross Point Data	-----	Data High	Data Low	
P23	26	O	XD3: Cross Point Data	-----	Data High	Data Low	
P60	31	I	OL: EXT Over Current Detection	-----	Over Current	Normal	EXT11-18
P61	32	I	PRG: System Selection	-----	System Mode	Program Mode	
P30	36	O	PDRLY: Power Failure Control	Break	Make	Break	RLY10A-10C
P31	37	O	DL3: Line Close, Dial Transmission	Break	Make	Break	CO3
P32	38	O	CF3: CO Amp Conference	Conference	Non-Conference	Conference	CO3
P33	39	O	HD3: CO Amp Hold on Music Control	Transmission	Non-Transmission	Transmission	CO3
P34	40	O	SH3: CO Amp Shunt Control	Shunt	Non-Shunt	Shunt	CO3
P35	41	O	MT3: CO Amp Mute Control	Non-Mute	Mute	Non-Mute	CO3
P37	45	I	BELL3: Bell, CPC Input	-----	Non-Bell,Line Break	Bell, Line Make	CO3
P40	46	O	DAY: Day Mode LED Control	Lights-Out	Lighting	Lights-Out	
P41	47	O	DL2: Line Close, Dial Transmission	Break	Make	Break	CO2
P42	48	O	CF2: CO Amp Conference	Conference	Non-Conference	Conference	CO2
P43	49	O	HD2: CO Amp Hold on Music Control	Transmission	Non-Transmission	Transmission	CO2
P44	50	O	SH2: CO Amp Shunt Control	Shunt	Non-Shunt	Shunt	CO2
P45	51	O	MT2: CO Amp Mute Control	Non-Mute	Mute	Non-Mute	CO2
P46	53	O	BUSY2: Doorphone 2 ON/Off Control	Off	On	Off	
P47	54	I	BELL2: Bell, CPC Input	-----	Non-Bell,Line Break	Bell, Line Make	CO2
P50	55	O	NIGHT: Night Mode LED Control	Lights-Out	Lighting	Lights-Out	
P51	56	O	DL1: Line Close, Dial Transmission	Break	Make	Break	CO1
P52	57	O	CF1: CO Amp Conference	Conference	Non-Conference	Conference	CO1
P53	58	O	HD1: CO Amp Hold on Music Control	Transmission	Non-Transmission	Transmission	CO1
P54	59	O	SH1: CO Amp Shunt Control	Shunt	Non-Shunt	Shunt	CO1
P55	60	O	MT1: CO Amp Mute Control	Non-Mute	Mute	Non-Mute	CO1
P56	61	O	BUSY1: Doorphone 1 ON/Off Control	Off	On	Off	
P57	62	I	BELL1: Bell, CPC Input	-----	Non-Bell,Line Break	Bell, Line Make	CO1

ADJUSTMENTS

■ OSCILLATION PERIOD ADJUSTMENT

Perform the following adjustment after replacing IC109.

1. Connect the AC cord to the AC power source.
2. Set the power switch to ON.
3. Connect the lead wire. (See Fig. 12)
   (After adjustment, remove the lead wire.)
4. Push the reset switch.
5. Connect the frequency counter. (See Fig. 11)
6. Set the frequency counter to PERIOD.
7. Adjust VC100 for a reading of ( ) msec on the frequency counter.

Room temperature for adjusting (°C)	Period value (msec)	Room temperature for adjusting (°C)	Period value (msec)
14~14.9	15.624943 (±0.00001)	20~20.9	15.624880 (±0.00001)
15~15.9	15.624933 (±0.00001)	21~21.9	15.624876 (±0.00001)
16~16.9	15.624922 (±0.00001)	22~27.9	15.624870 (±0.00001)
17~17.9	15.624910 (±0.00001)	28~28.9	15.624876 (±0.00001)
18~18.9	15.624899 (±0.00001)	29~29.9	15.624880 (±0.00001)
19~19.9	15.624888 (±0.00001)		

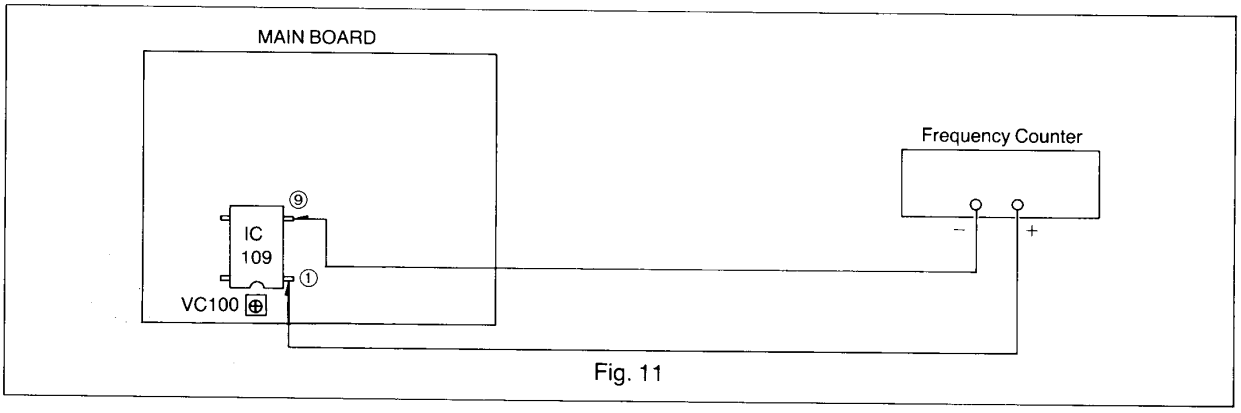

Fig. 11

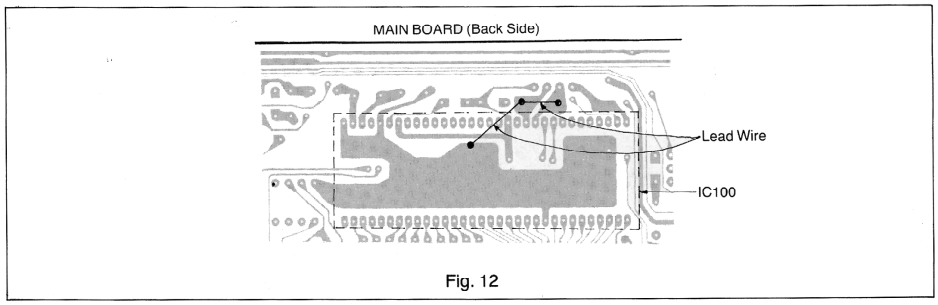

Fig. 12

BLOCK DIAGRAM

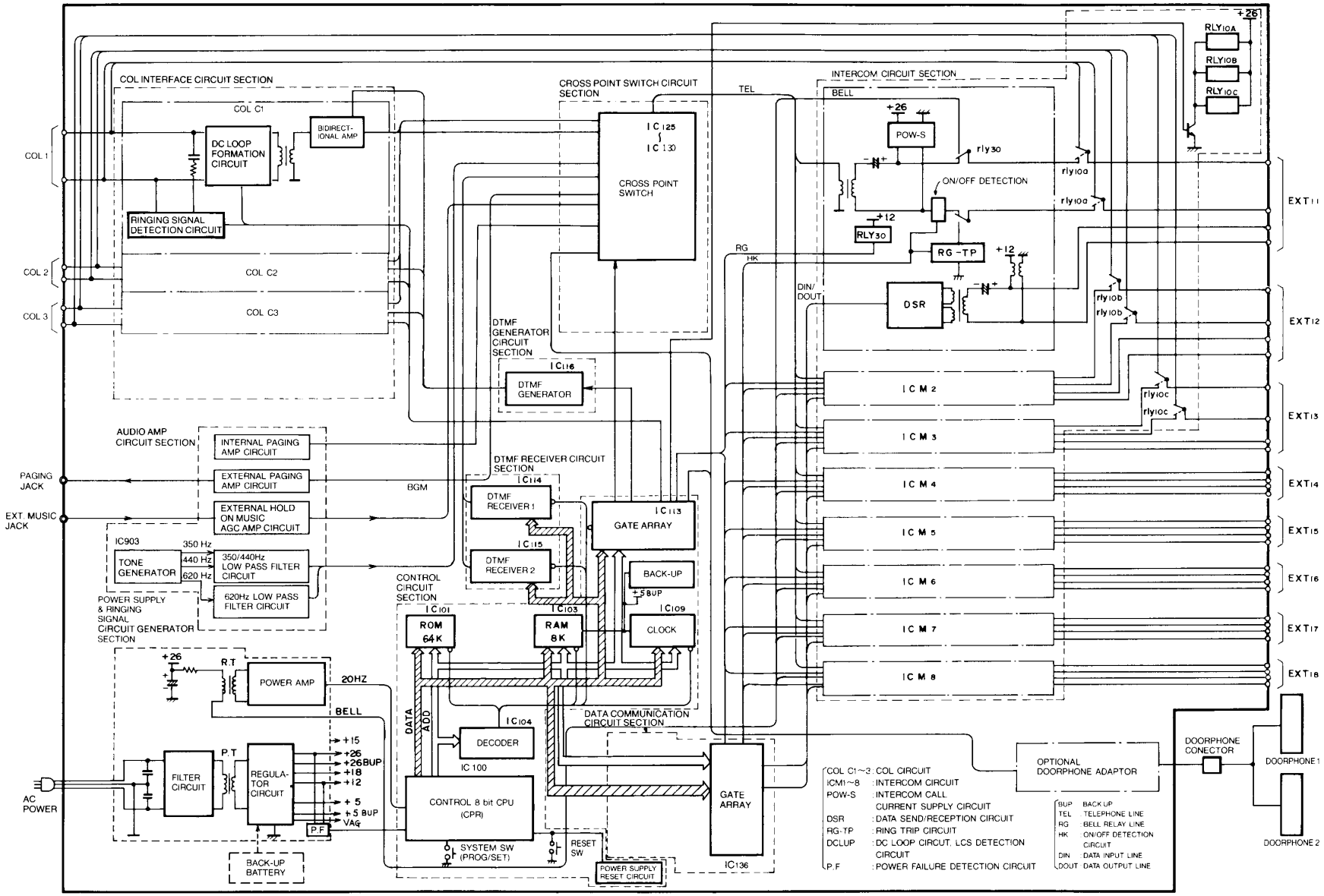

KX-T30810-1

SCHEMATIC DIAGRAM

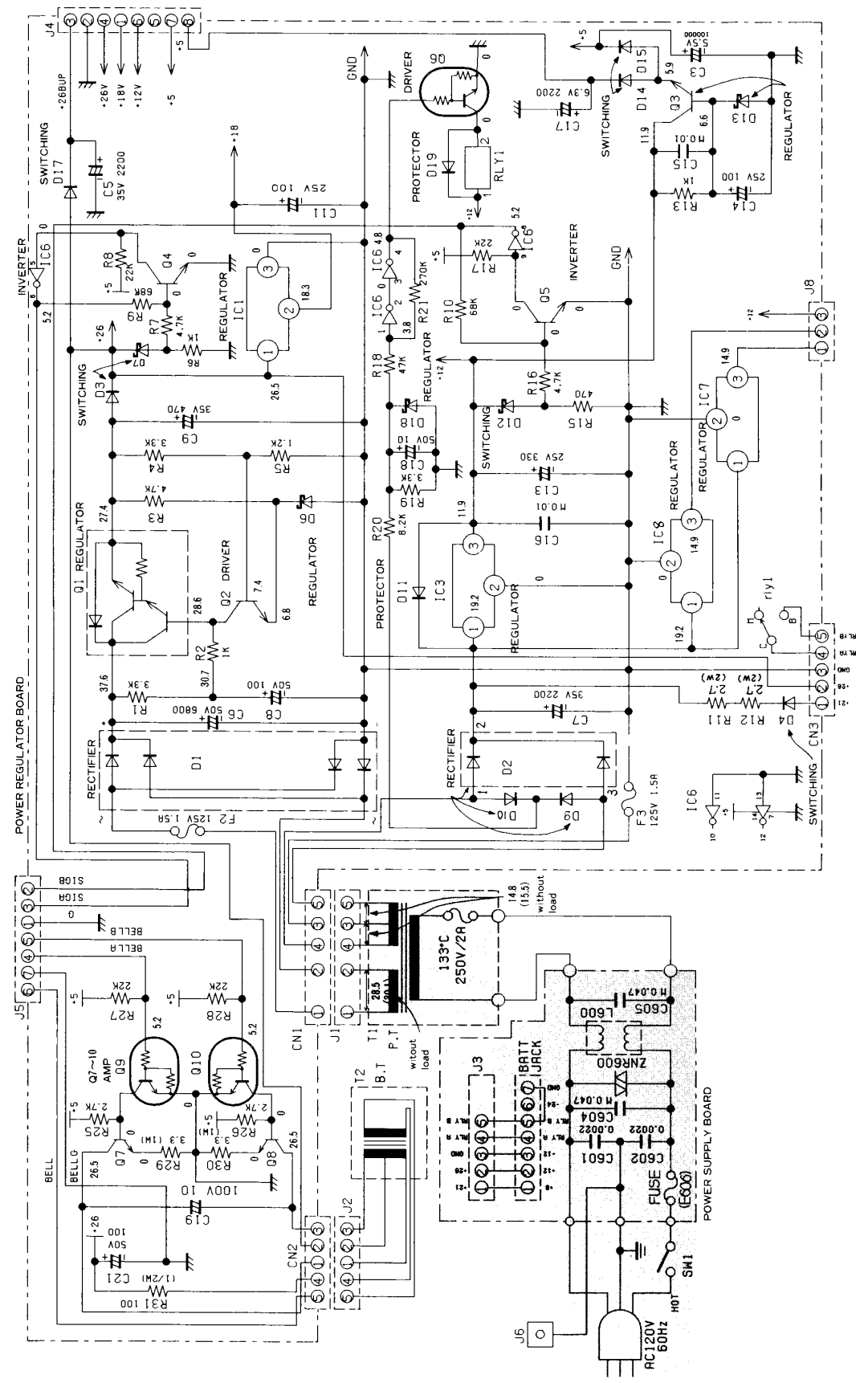

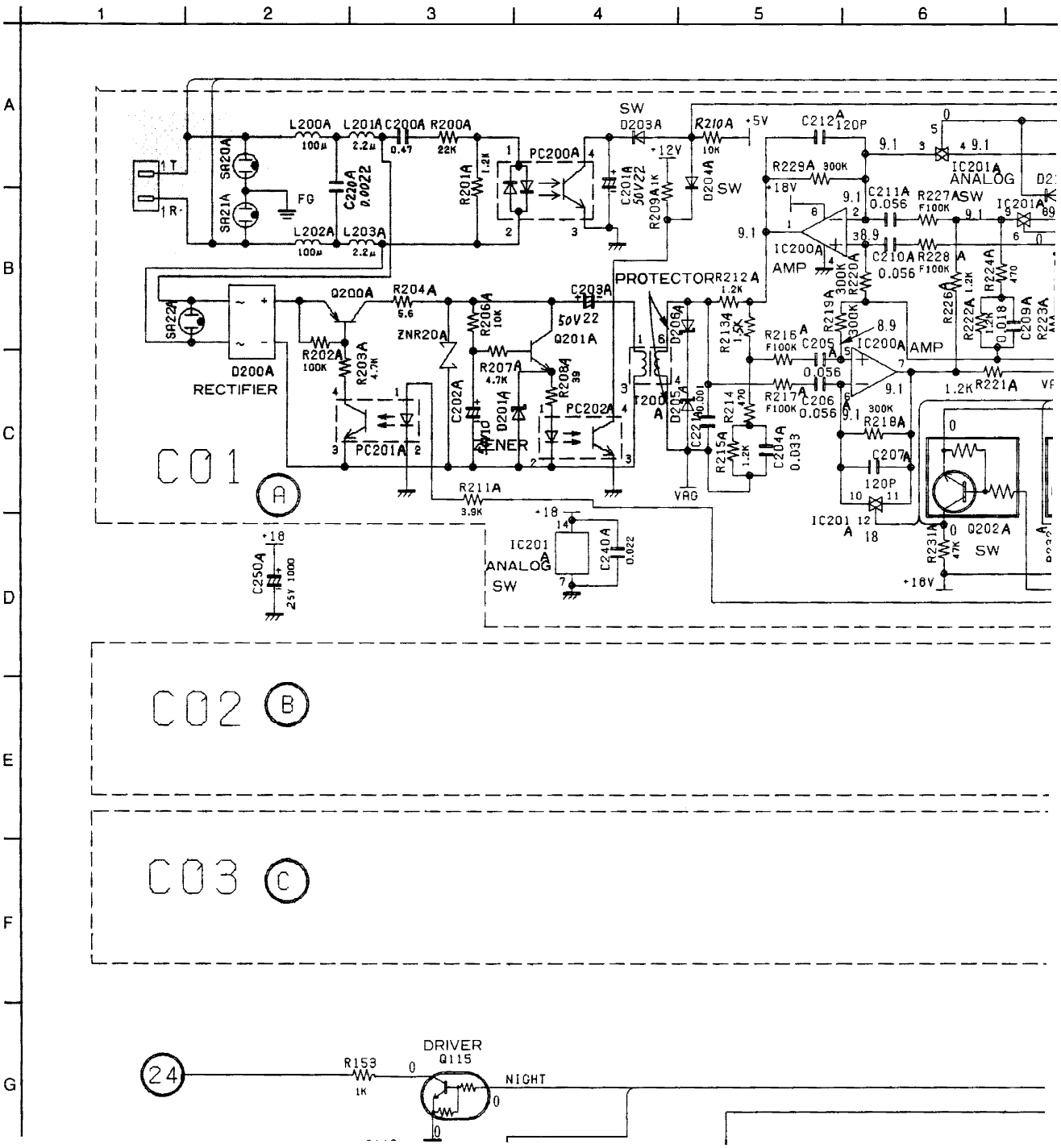

C01
A
C02
B
C03
C
PROTECTOR
RECTIFIER
D200A
IC201A ANALOG SW
IC200A AMP
Q202A SW
DRIVER
Q115
NIGHT
24

SCHEMATIC DIAGRAM

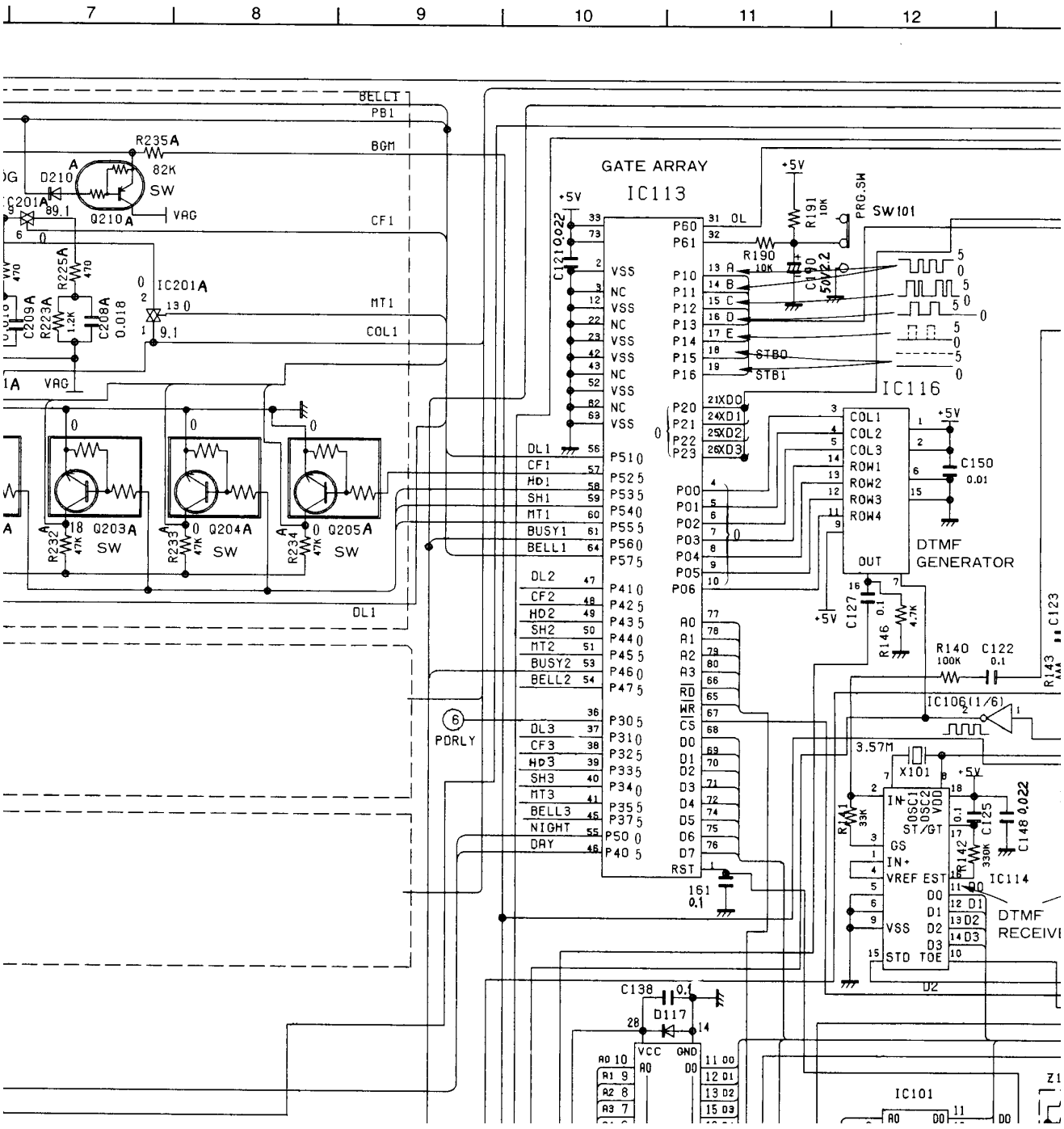

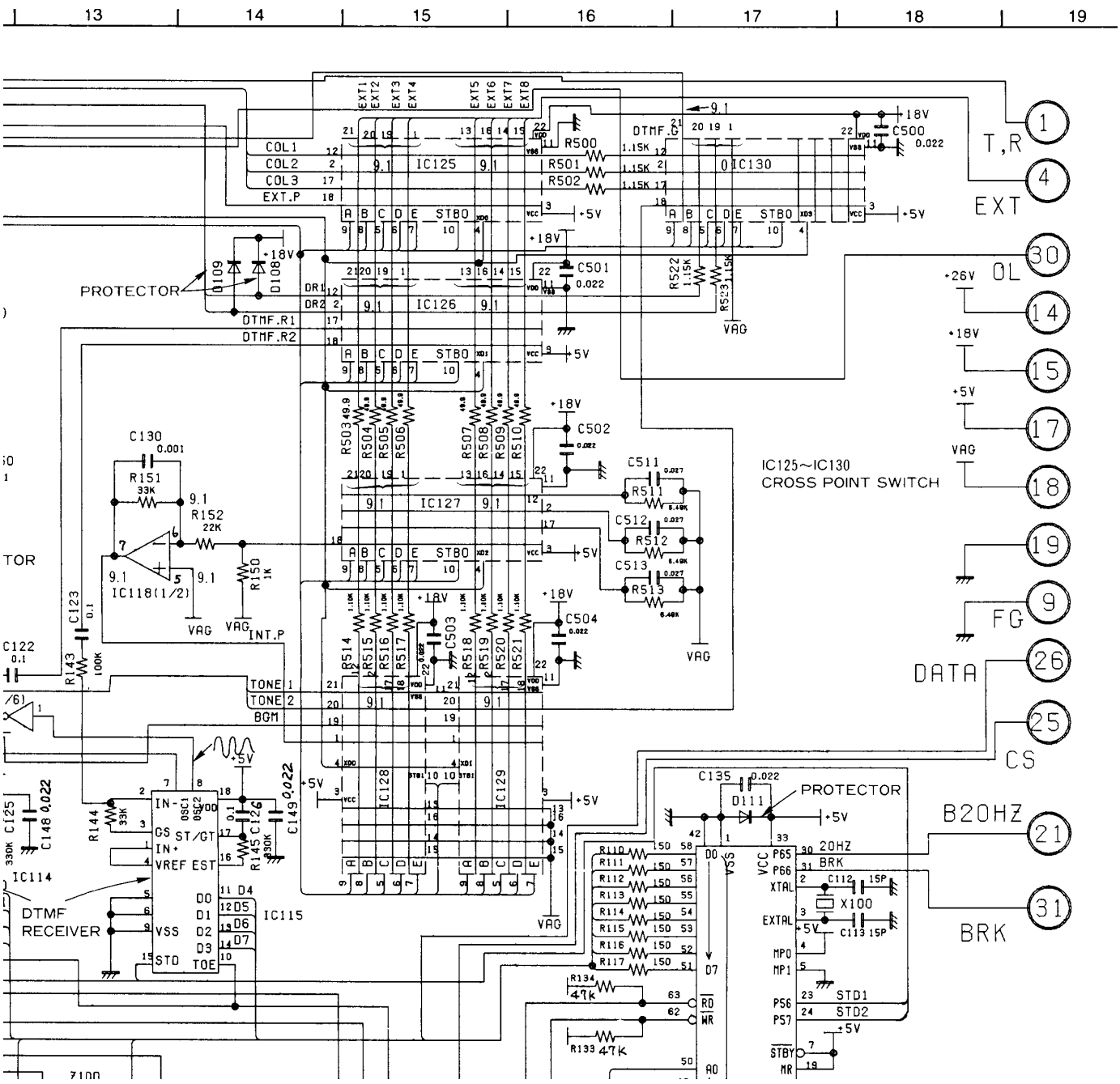
13
14
15
16
17
18
19
T,R
EXT
OL
FG
DATA
CS
B20HZ
BRK
PROTECTOR
IC125~IC130
CROSS POINT SWITCH
DTMF
RECEIVER
IC114
IC115
IC118(1/2)
IC125
IC126
IC127
IC128
IC129
IC130
COL1
COL2
COL3
EXT.P
DTMF.R1
DTMF.R2
DTMF.G
INT.P
TONE 1
TONE 2
BGM
+18V
+5V
+26V
VAG
20HZ
BRK
STD1
STD2
X100

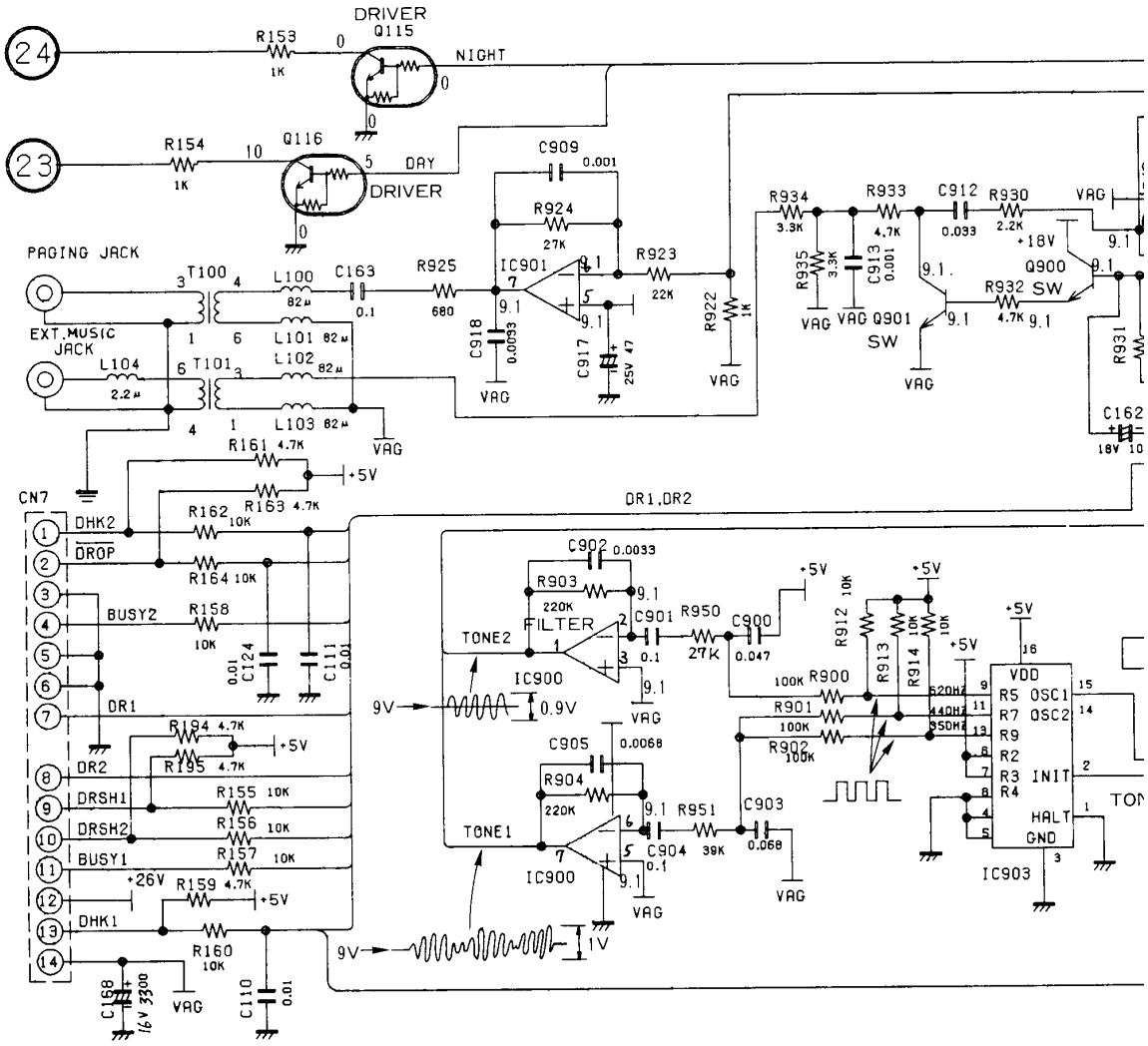

Notes:

1. SW1: Power switch.
2. SW100: Reset switch.
3. SW101: System program switch in "PROGRAM" position.
4. DC voltage measurements are taken with electronic voltmeter and oscilloscope from ground line.

   (•Power Switch ON condition
   •Voltage Value: V)

5. This schematic diagram may be modified at any time with the development of new technology.

6. Important safety notice
   The shaded area on this schematic diagram incorporates special features important for protection from fire and electrical shock hazards. When servicing it is essential that only manufacturer's specified parts be used for the critical components in the shaded areas of the schematic.

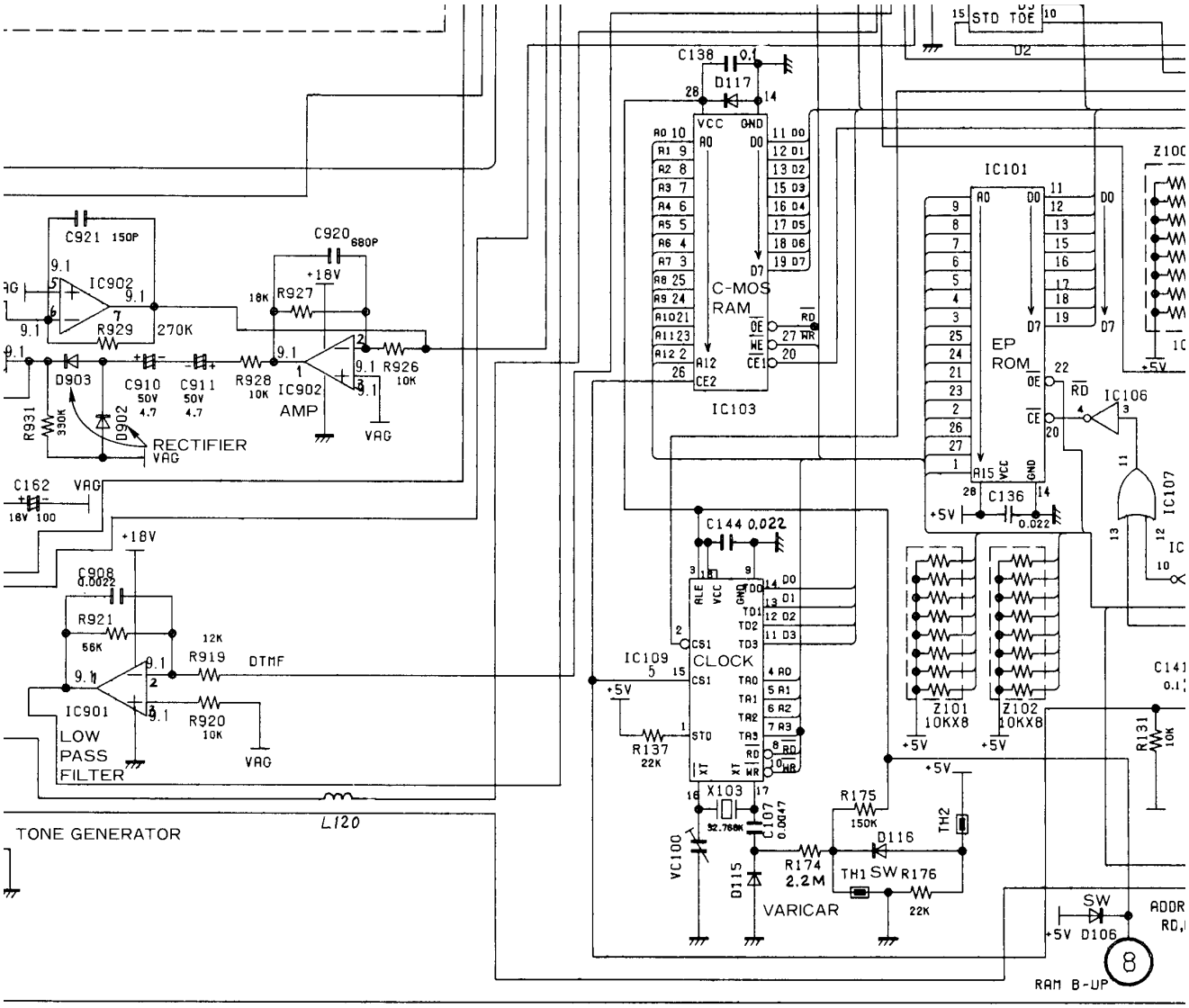
C921 150P
IC902
R929 270K
C920 680P
+18V
R927
R928 10K
IC902 AMP
R926 10K
D903
C910 50V 4.7
C911 50V 4.7
R931 330K
D902
RECTIFIER
VAG
C162 VAG
16V 100
+18V
C908 0.0022
R921 56K
12K
R919 DTMF
IC901
LOW PASS FILTER
R920 10K
VAG
TONE GENERATOR
L120
C138 0.1
D117
C-MOS RAM
IC103
IC101
EP ROM
IC106
IC107
C136 0.022
C144 0.022
IC109 CLOCK
R137 22K
X103 32.768K
C107 0.0047
VC100
D115
VARICAR
R174 2.2M
D116
TH1 SW R176 22K
R175 150K
TH2
Z101 10KX8
Z102 10KX8
R131 10K
SW
+5V D106
RAM B-UP
8

7.

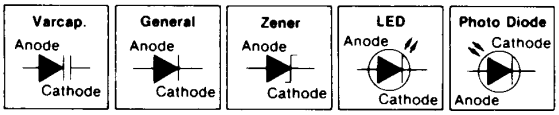
Varcap.
Anode
Cathode
General
Anode
Cathode
Zener
Anode
Cathode
LED
Anode
Cathode
Photo Diode
Cathode
Anode

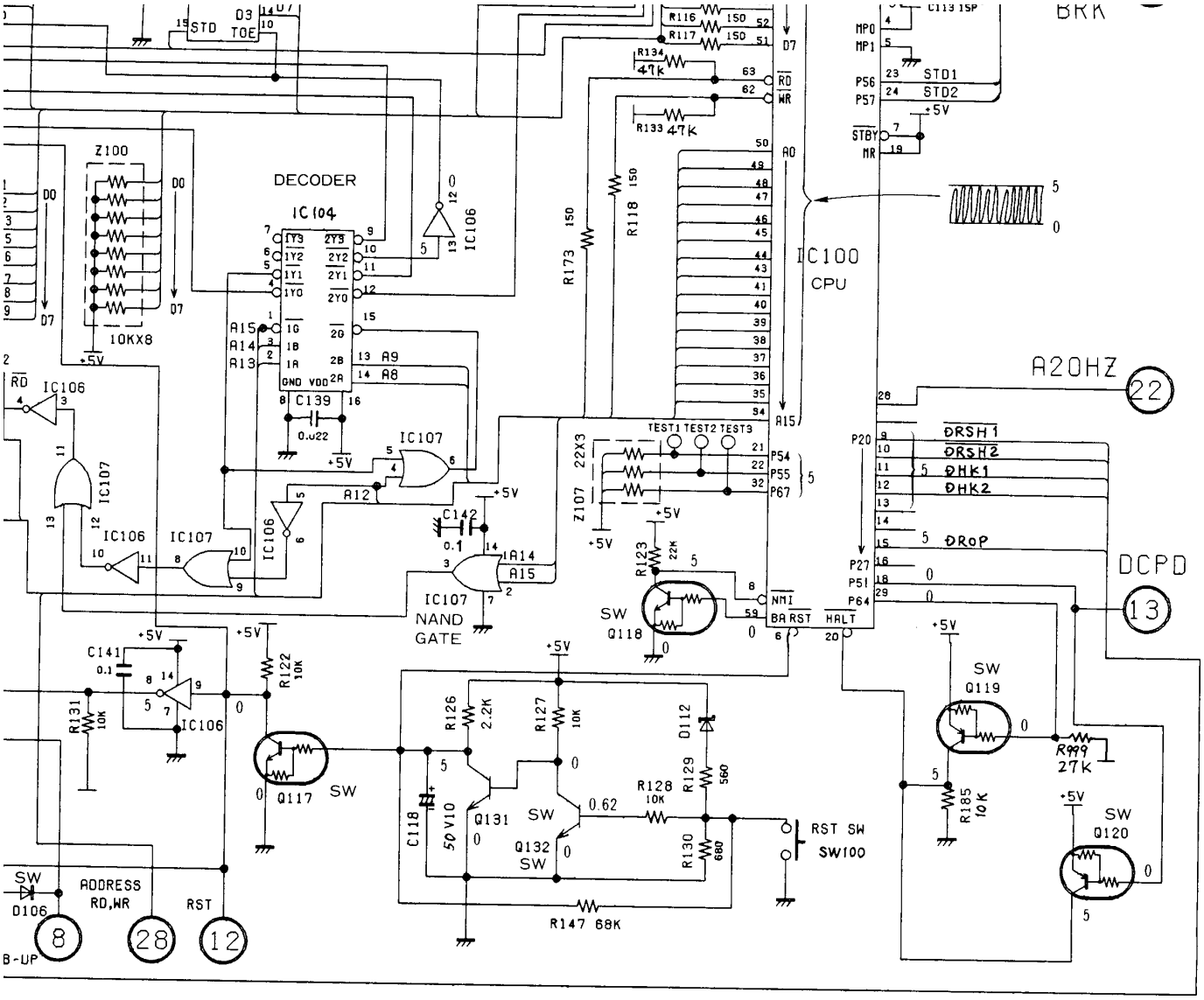

DECODER
IC104
IC100
CPU
A20HZ
DCPD
IC107
NAND
GATE
Z100
10KX8
Z107
22X3
TEST1 TEST2 TEST3
STD1
STD2
STBY
MR
RST SW
SW100
ADDRESS
RD,WR
RST
B-UP

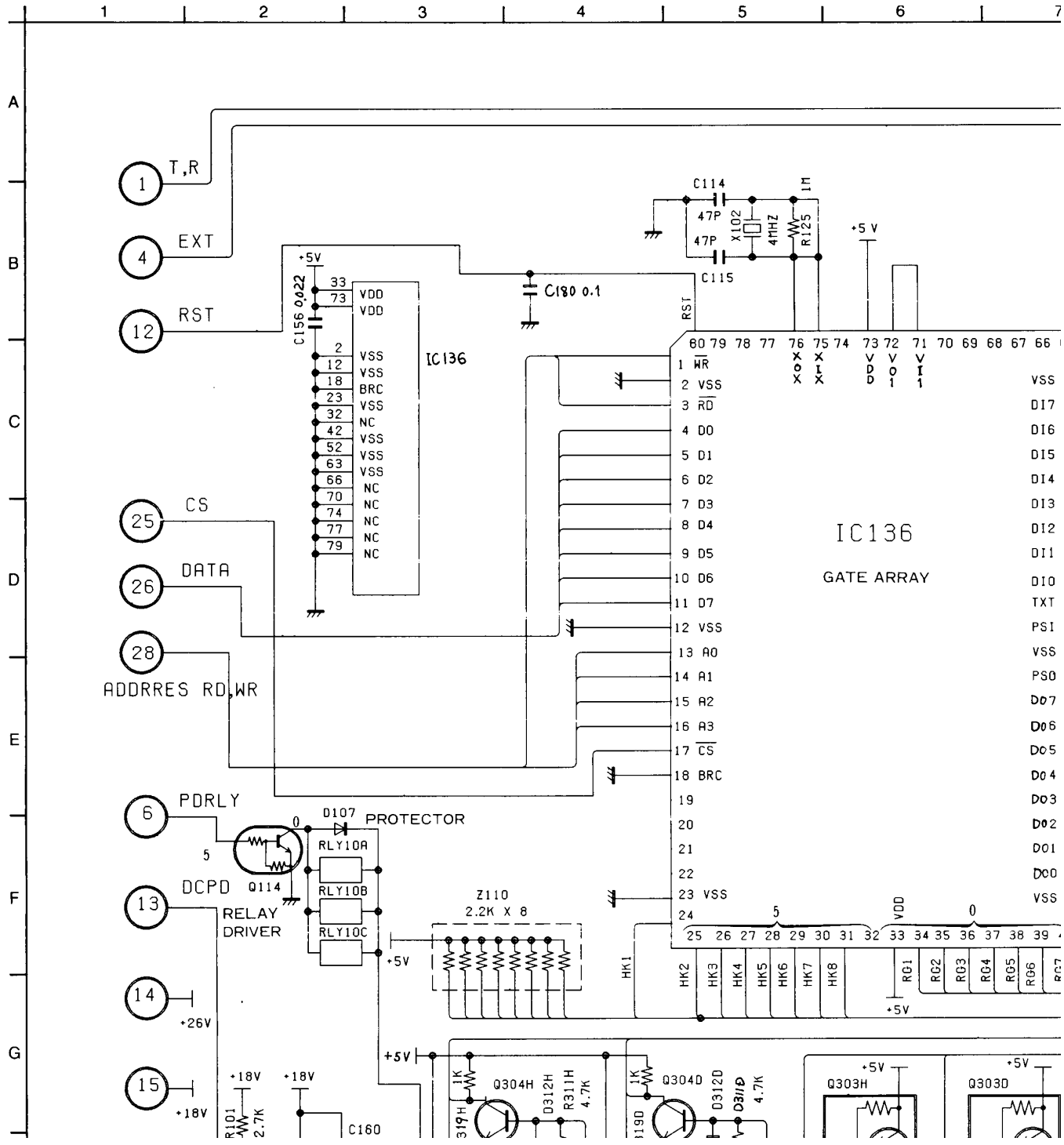
1
2
3
4
5
6
7
A
B
C
D
E
F
G
1 T,R
4 EXT
12 RST
25 CS
26 DATA
28 ADDRRES RD,WR
6 PDRLY
13 DCPD
RELAY DRIVER
14 +26V
15 +18V
+5V
C114 47P
47P
X102 4MHZ
R125 1M
C115
C180 0.1
C156 0.022
IC136
33 VDD
73 VDD
2 VSS
12 VSS
18 BRC
23 VSS
32 NC
42 VSS
52 VSS
63 VSS
66 NC
70 NC
74 NC
77 NC
79 NC
RST
IC136
GATE ARRAY
1 WR
2 VSS
3 RD
4 D0
5 D1
6 D2
7 D3
8 D4
9 D5
10 D6
11 D7
12 VSS
13 A0
14 A1
15 A2
16 A3
17 CS
18 BRC
19
20
21
22
23 VSS
24
VSS
DI7
DI6
DI5
DI4
DI3
DI2
DI1
DI0
TXT
PSI
VSS
PS0
DO7
DO6
DO5
DO4
DO3
DO2
DO1
DO0
VSS
D107 PROTECTOR
RLY10A
RLY10B
RLY10C
Q114
Z110 2.2K X 8
HK1
HK2
HK3
HK4
HK5
HK6
HK7
HK8
RG1
RG2
RG3
RG4
RG5
RG6
Q304H
Q304D
Q303H
Q303D
R101 2.7K
C160
+18V

SCHEMATIC DIAGRAM

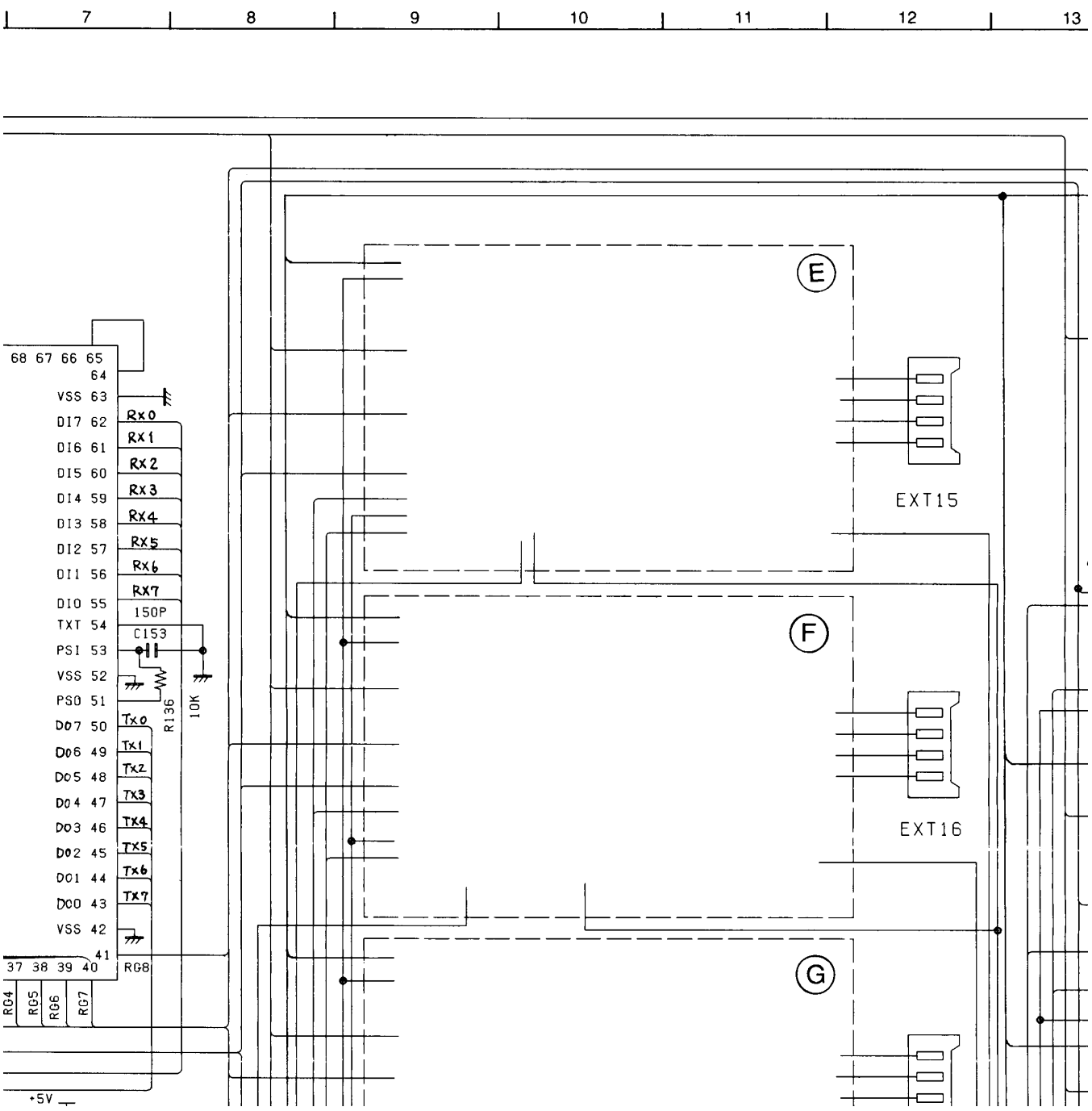

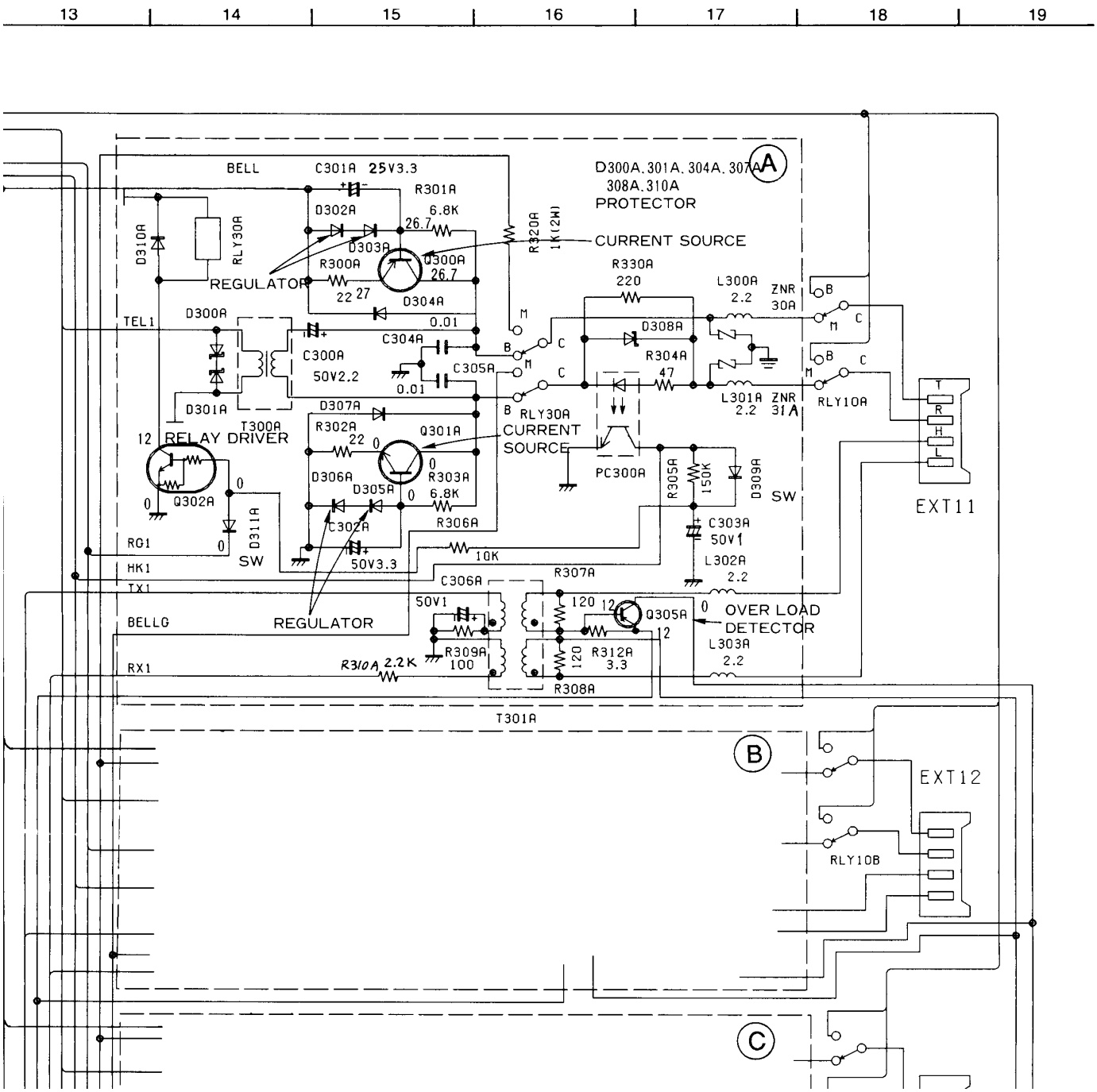
13
14
15
16
17
18
19
A
B
C
D300A, 301A, 304A, 307A
308A, 310A
PROTECTOR
BELL
C301A 25V3.3
R301A
6.8K
D302A
26.7
D303A
Q300A
26.7
R300A
22 27
D304A
D310A
RLY30A
REGULATOR
R320A
1K(2W)
CURRENT SOURCE
R330A
220
L300A
2.2
ZNR
30A
D308A
R304A
47
L301A
2.2
ZNR
31A
RLY10A
TEL1
D300A
C300A
50V2.2
C304A
0.01
C305A
0.01
D301A
T300A
D307A
R302A
22
Q301A
RLY30A
CURRENT
SOURCE
PC300A
R305A
150K
D309A
SW
12
RELAY DRIVER
Q302A
D306A
D305A
R303A
6.8K
C302A
R306A
D311A
SW
RG1
HK1
TX1
BELLG
RX1
50V3.3
10K
C303A
50V1
L302A
2.2
C306A
50V1
R307A
120
Q305A
OVER LOAD
DETECTOR
L303A
2.2
R309A
100
R310A 2.2K
R312A
3.3
R308A
T301A
EXT11
EXT12
RLY10B

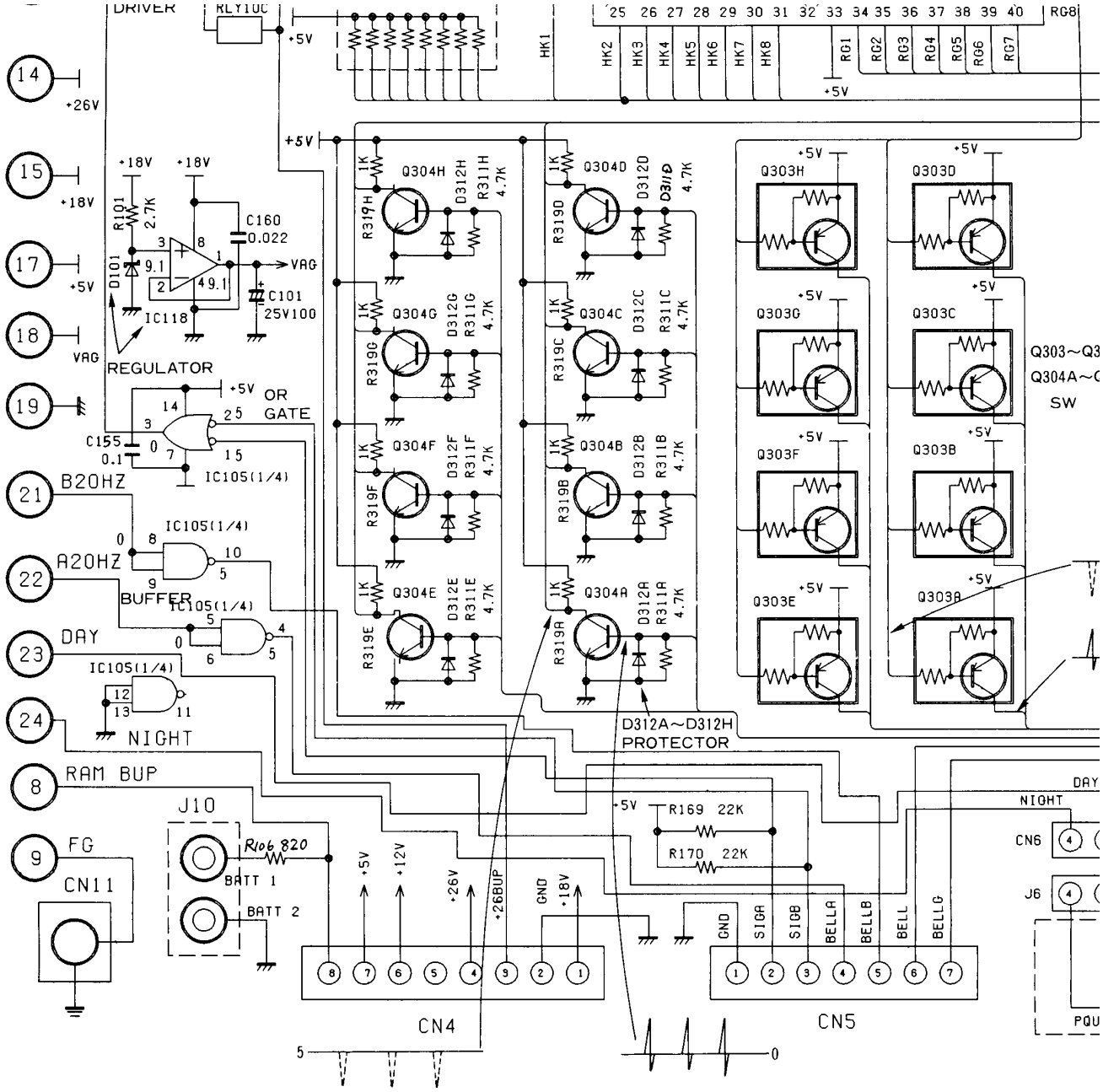
DRIVER
RLY10C
+5V
HK1
HK2
HK3
HK4
HK5
HK6
HK7
HK8
RG1
RG2
RG3
RG4
RG5
RG6
RG7
RG8
14
+26V
15
+18V
17
+5V
18
VAG
19
21
B20HZ
22
A20HZ
23
DAY
24
NIGHT
8
RAM BUP
9
FG
R101 2.7K
C160 0.022
C101 25V100
D101
IC118
REGULATOR
OR GATE
C155 0.1
IC105(1/4)
BUFFER
Q304H
Q304G
Q304F
Q304E
Q304D
Q304C
Q304B
Q304A
D312H
D312G
D312F
D312E
D312D
D312C
D312B
D312A
R311H 4.7K
R311G 4.7K
R311F 4.7K
R311E 4.7K
R311D 4.7K
R311C 4.7K
R311B 4.7K
R311A 4.7K
R319H
R319G
R319F
R319E
R319D
R319C
R319B
R319A
1K
Q303H
Q303G
Q303F
Q303E
Q303D
Q303C
Q303B
Q303A
Q303~Q3
Q304A~C
SW
D312A~D312H
PROTECTOR
J10
R106 820
BATT 1
BATT 2
R169 22K
R170 22K
CN11
CN4
CN5
CN6
J6
+12V
+26VBUP
GND
+18V
SIGA
SIGB
BELLA
BELLB
BELL
BELLG
DAY
NIGHT
PQU

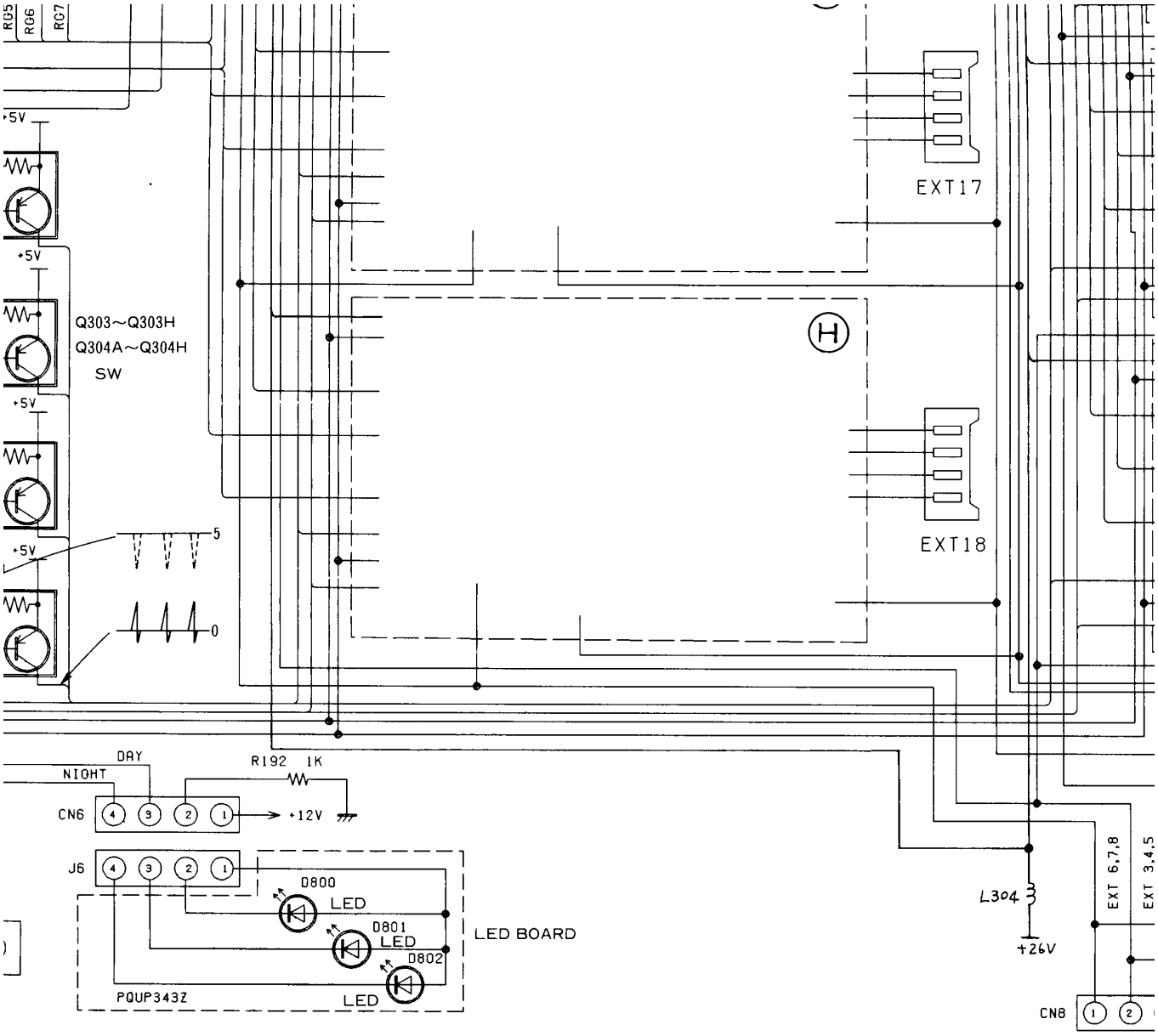
RG5
RG6
RG7
+5V
+5V
+5V
+5V
Q303~Q303H
Q304A~Q304H
SW
5
0
EXT17
EXT18
H
DAY
NIGHT
R192 1K
CN6
+12V
J6
D800
LED
D801
LED
D802
LED
LED BOARD
PQUP343Z
L304
+26V
EXT 6,7,8
EXT 3,4,5
CN8

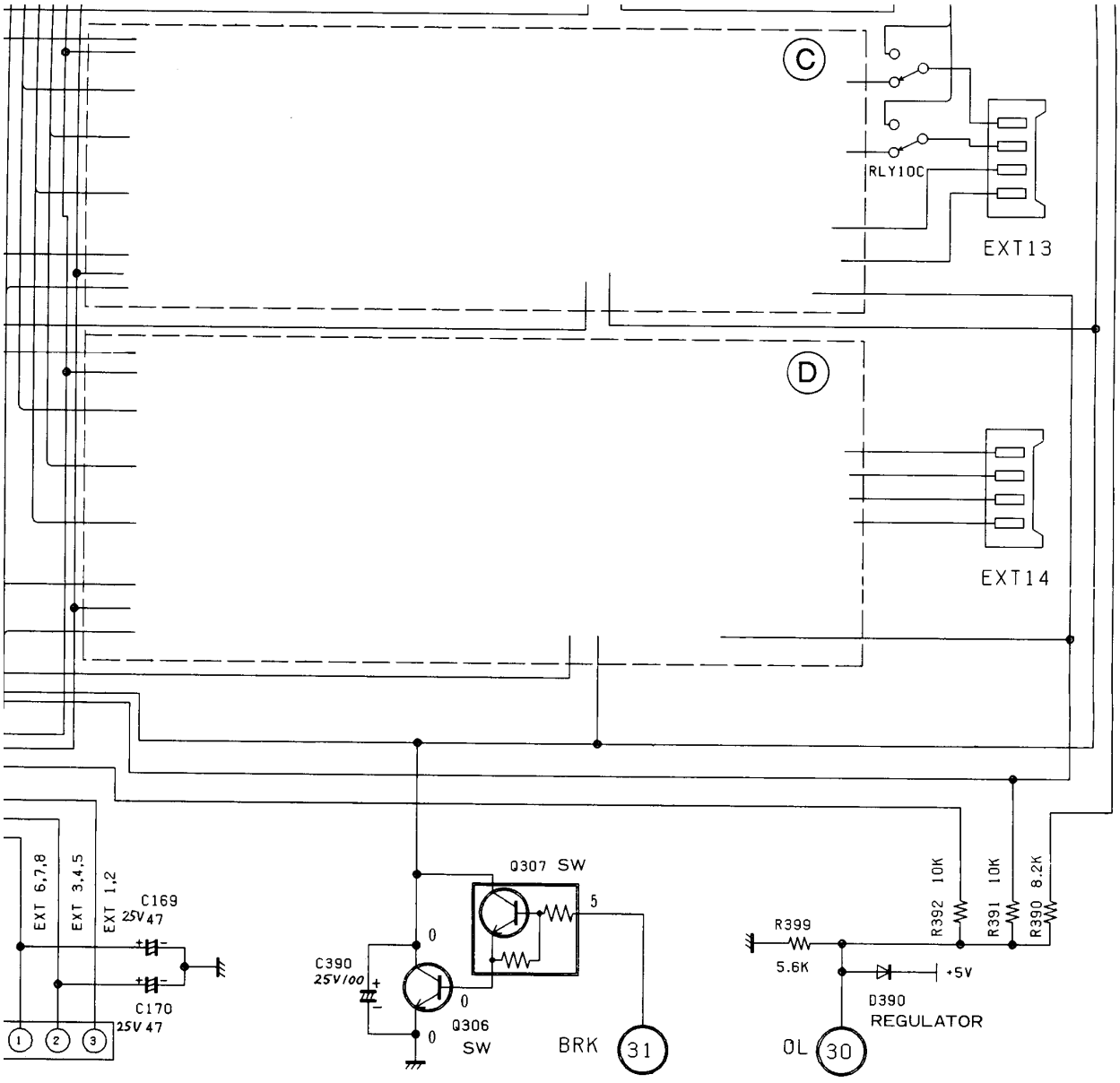
C
RLY10C
EXT13
D
EXT14
EXT 6,7,8
EXT 3,4,5
EXT 1,2
C169
25V47
C170
25V47
1
2
3
Q307 SW
5
0
C390
25V100
0
Q306
SW
0
BRK
31
R399
5.6K
R392 10K
R391 10K
R390 8.2K
+5V
D390
REGULATOR
OL
30

WIRING CONNECTION DIAGRAM

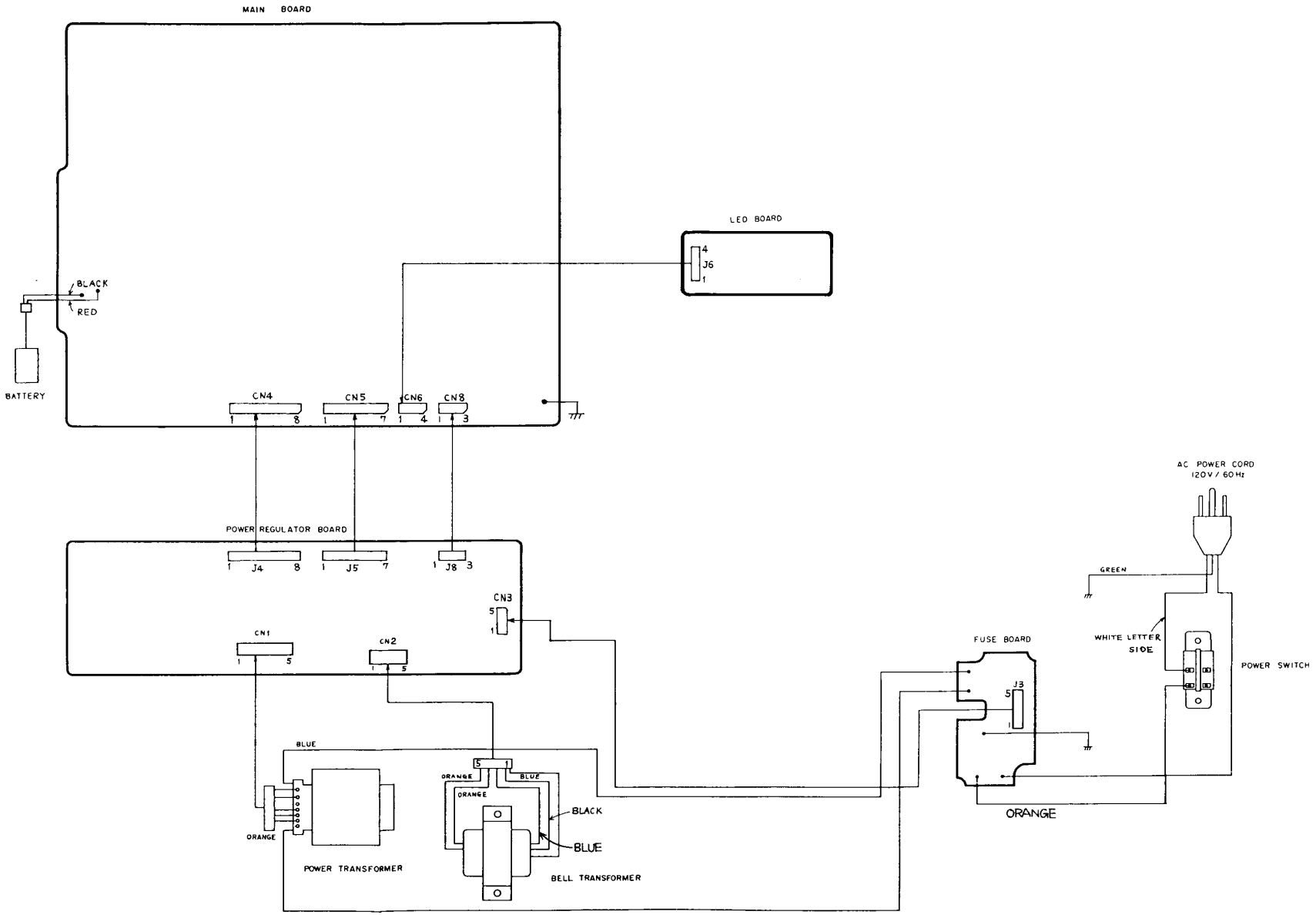

IC BLOCK DIAGRAM

IC100 PQVIH63B03XP

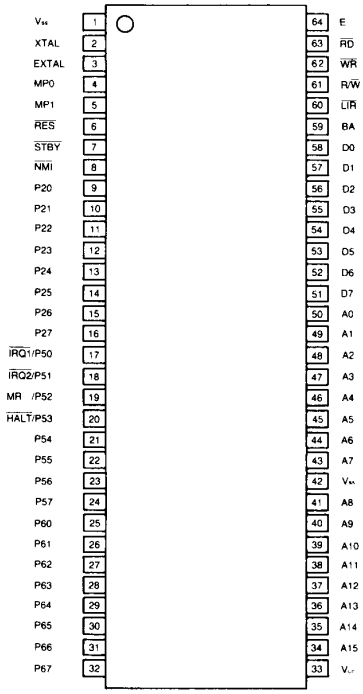

IC104 PQVITC7H139P

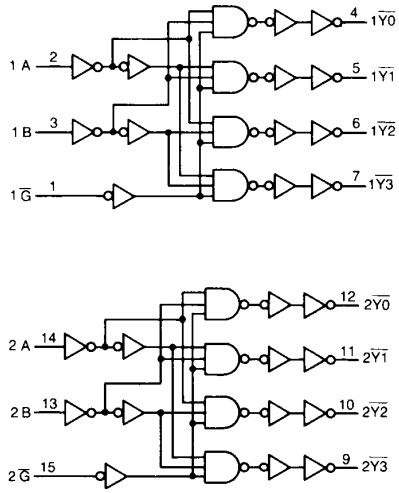

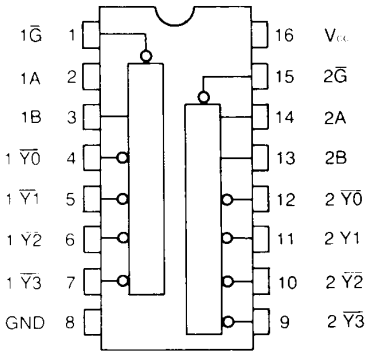

IC103 PQVIHM6264LA

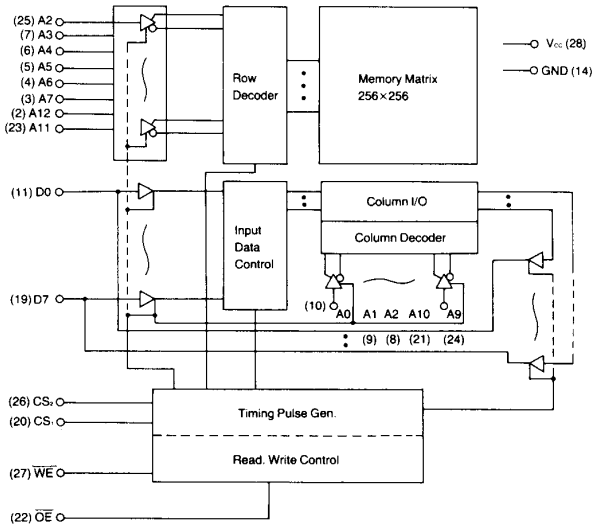

IC109 PQVIMS6242BS

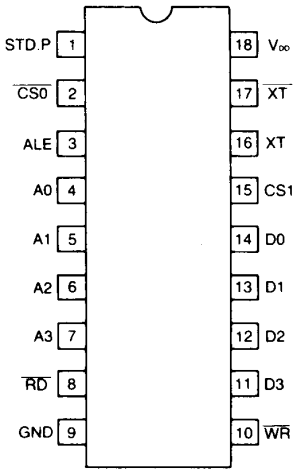

KX-T30810-1

IC114, 115 PQVIMT8870BC

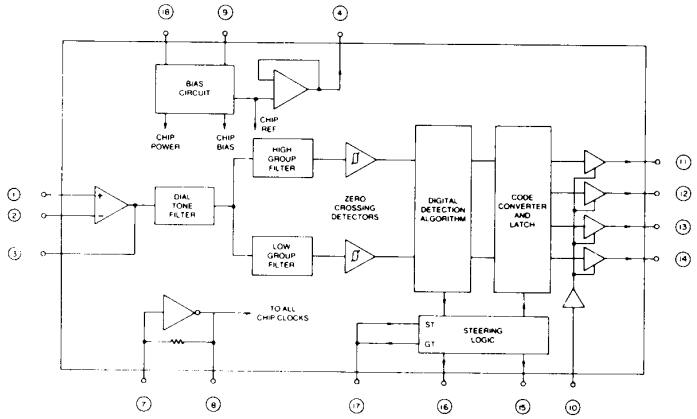

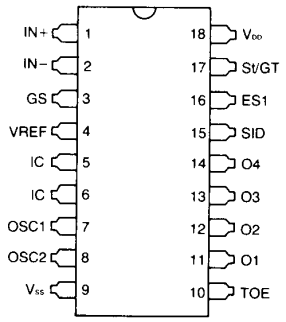

IC903 PQVIBU3140

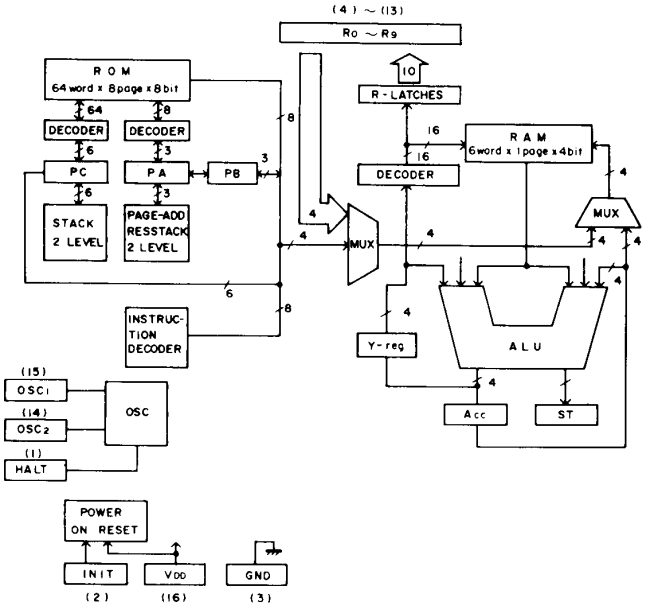

IC125~130 PQVIM402101P

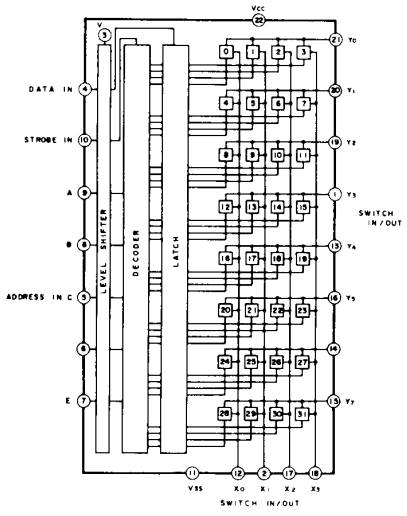

TERMINAL GUIDE OF IC'S, TRANSISTORS AND DIODES

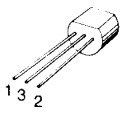

AN78L18

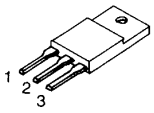

AN78M12F

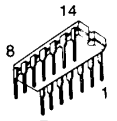

PQVITC7H04P
PQVINJM4011BC
PQVIPD4066UC

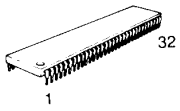

PQVIH63B03XP

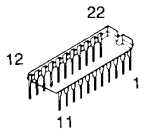

PQVIM402101P

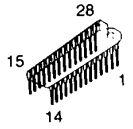

PQVIHM6264LA
PQWIT30810M2

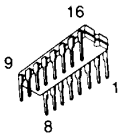

PQVITC7H139P

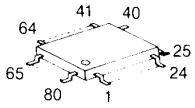

PQVI671152F
PQVI672191F

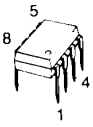

PQVINJM4558D

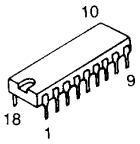

PQVIMS6242BS

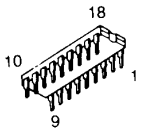

PQVIMT8870BC

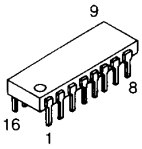

PQVITP5089N

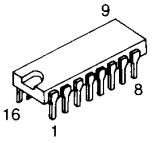

PQVIBU3140

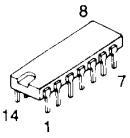

PQVITC7H32P

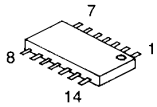

PQVIPD4066BC

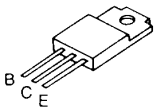

2SD1275
2SD1406

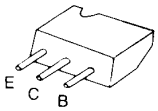

2SB644
2SD637
2SD639

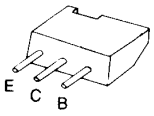

DTA124XA
DTA143A
DTC143XA
DTC144A
2SA937
2SC2021
PQVTDTC114Y

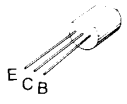

2SC2235

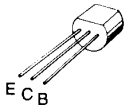

2SC2878

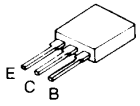

2SA1626

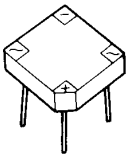

PQVD2B4B41

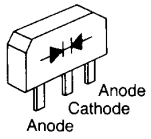

PQVDMI151

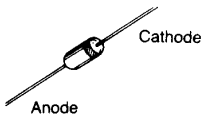

1SS131
1SV124
1SR35-200
MA4030
PQVDHZS2B1

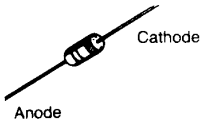

MA4039
MA4047
MA4051
MA4062
MA4091
PQVDHZ7A2

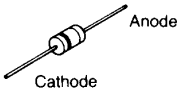

MA4200

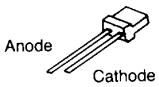

LN220RPH
LN320GPH
LN420YPH

EXPLODED VIEW

Ref. No.	Part No.
A	XTW3+S10M
B	XTB3+12CFN
C	XTW3+S16M
D	XYN3+F10
E	XSS3+7FN
F	XYN4+F8
G	XTN3+8C
H	XTW3+8L
I	XYN4+C6
J	XSN4D8FN
K	XTW3+6L
L	XYN4+F6
M	XWC4B
N	XWC3B

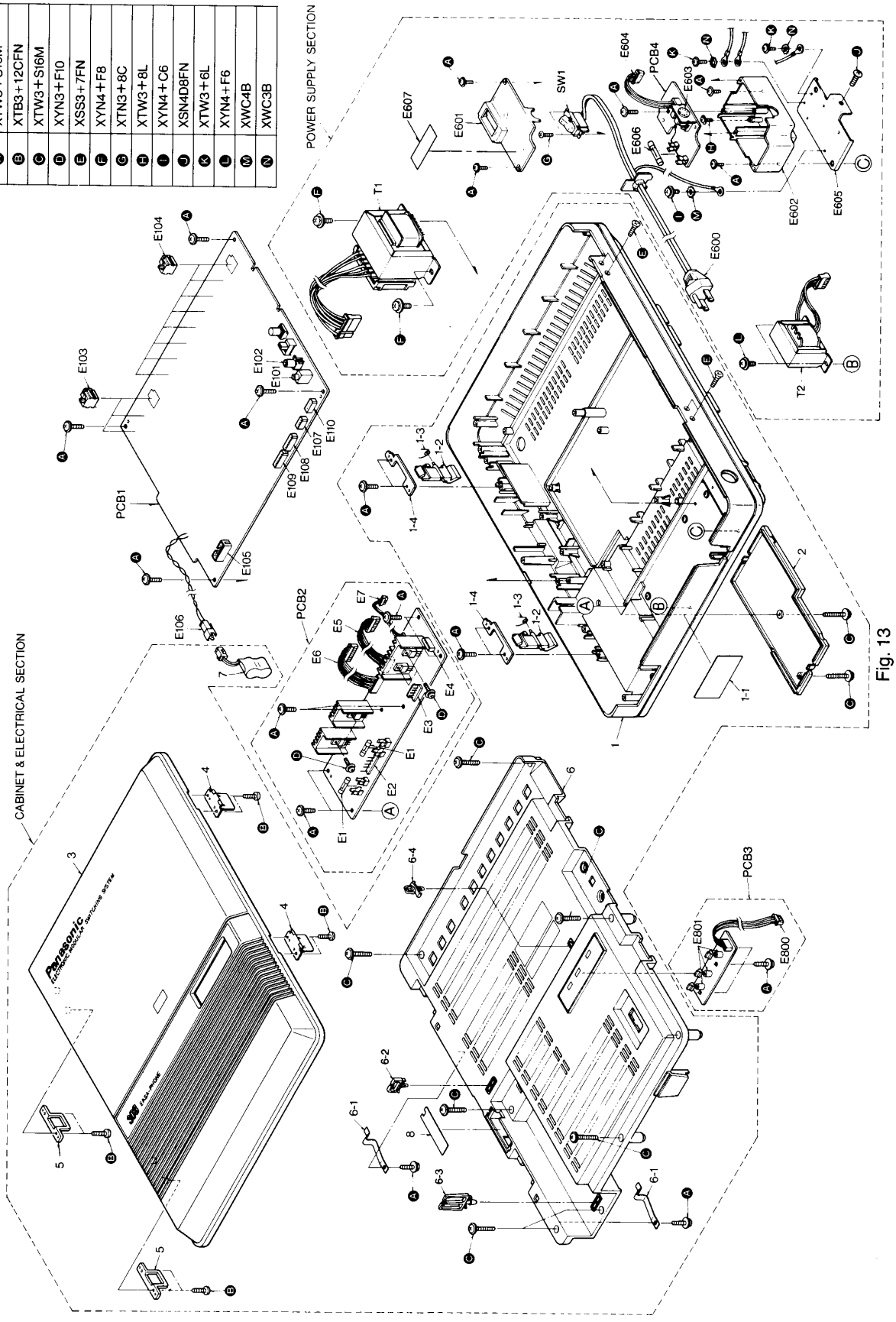

Fig. 13

ACCESSORIES & PACKING MATERIALS

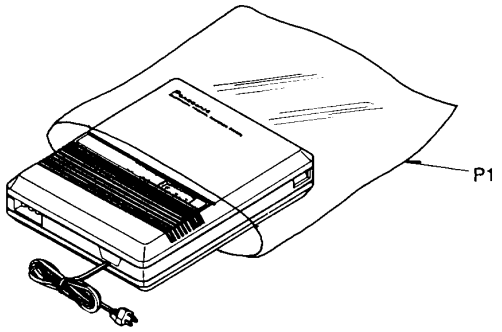

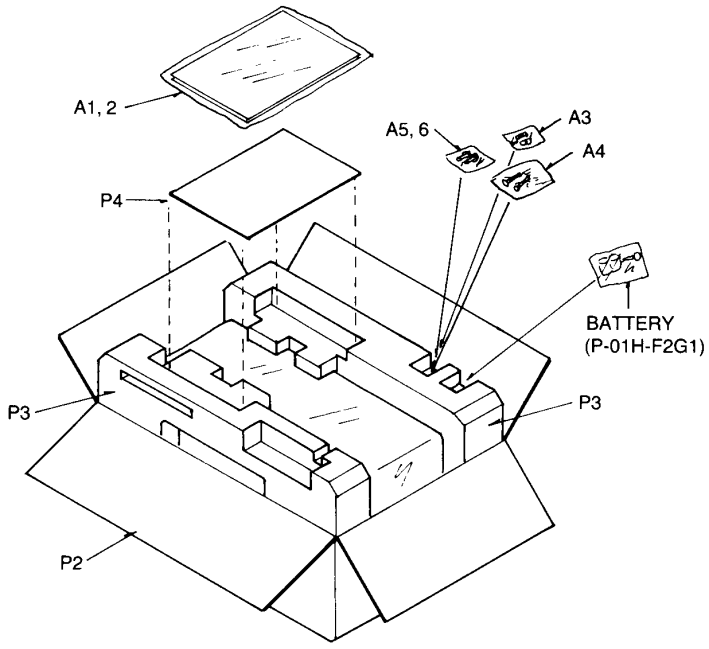

Fig. 15

A3
PQHE10Z

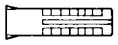

A4
PQHE5008Z

A5
PQJP1E1Z

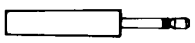

A6
PQJP1E2Z

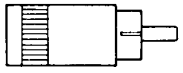

REPLACEMENT PARTS LIST

Notes: Model KX-T30810-1

1. Printed circuit board assembly with mark (NLA) is no longer available after production discontinuation of the complete set.
2. Important safety notice.
   Components identified by the ⚠ mark special characteristics important for safety.
   When replacing any of these components, use only manufacturer's specified parts.
3. The S mark indicates service standard parts and may differ from production parts.
4. RESISTORS & CAPACITORS
   Unless otherwise specified.
   All resistors are in ohms(Ω) k=l000Ω,M=l000kΩ
   All capacitors are in MICRO FARADS(μF) P= 0.001μF
   *Type &Wattage of Resistor
   Type

ERC:Solid	ERX:Metal Film	PQRD:Carbon
ERD:Carbon	ERG:Metal Oxide	PQRQ:Fuse
PQ4R:Chip	ERO:Metal Film	ERF:Wire Wound

Wattage

10,16,18:1/8W	14,25,S2:1/4W	12,50,S1:1/2W	1:1W	2:2W	5:5W

*Type & Voltage of Capacitor
Type

ECFD:Semi-Conductor	ECCD,ECKD,PQCBC, : Ceramic
ECQS:Styrol	ECQM,ECQV,ECQE,ECQU,ECQB : Polyester
PQCBX,ECUV:Chip	ECEA,ECSZ,ECOS : Electrolytic
ECMS:Mica	ECQP : Polyproplylene

Voltage

ECQ Type	ECQG ECQV Type	ECSZ Type	Others	
1H: 50V	05: 50V	OF:3.15V	OJ :6.3V	1V :35V
2A:100V	1:100V	1A:10V	1A :10V	50,1H:50V
2E:250V	2:200V	1V:35V	1C :16V	1J :63V
2H:500V		OJ:6.3V	1E,25:25V	2A :100V

Ref. No.	Part No.	Part Name & Description	Pcs
		CABINET & ELECTRICAL PARTS	
1	PQYMT30810M1	Rear Cabinet Assembly	1
1-1	PQGT373Z	Name Plate	1
1-2	PQHR9120Z8	Hook	2
1-3	PQUS91Z	Spring, Hook	2
1-4	PQUL51Z	Bracket, Hook	2
2	PQKE31Z8	Cabinet Door	1
3	PQYF1T30810M	Front Cabinet Assembly	1
4	PQBH2Z	Hinge-A	2
5	PQHR9121Z8	Hinge-B	2
6	PQYF230810M1	Inside Cover Assembly	1
6-1	PQUS102Z	Leaf Spring	2
6-2	PQHR118Z	Cord Holder-A	1
6-3	PQHR119Z	Cord Holder-B	1
6-4	PQHR120Z	Cord Holder-C	1
7	P-01H-F2G1	Battery	1
8	PQUV50Z	Battery Cover	1
		ACCESSORIES AND PACKING MATERIALS	
A1	PQQX5289Z	Installation Manual	1
A2	PQQX5291Z	User Guide	1
A3	PQHE10Z	Mounting Bracket (Curl Plug)	3
A4	PQHE5008Z	Mounting Bracket (Screw)	3
A5	PQJP1E1Z	Plug-A	1
A6	PQJP1E2Z	Plug-B	1
P1	XZB45X06A05	Protection Cover	1
P2	PQPK392Y	Packing Case	1
P3	PQPN9036Z	Cushion Complete (L,R Side)	1
P4	PQPN668Z	Cushion	1

Ref. No.	Part No.	Part Name & Description		Pcs
		MAIN BOARD PARTS		
PCB1	PQWP130810M1	Main P.C. Board Ass'y (NLA)		1
		(ICs)		
IC100	PQVIH63B03XP	IC		1
IC101	PQWIT30810M2	IC		1
IC102	Not Used			
IC103	PQVIHM6264LA	IC	S	1
IC104	PQVITC7H139P	IC	S	1
IC105	PQVIPD4011BC	IC	S	1
IC106	PQVITC7H04P	IC	S	1
IC107	PQVITC7H32P	IC	S	1
IC108	Not Used			
IC109	PQVIMS6242BS	IC		1
IC110-112	Not Used			
IC113	PQVI672191F	IC		1
IC114,115	PQVIMT8870BC	IC	S	2
IC116	PQVITP5089N	IC		1
IC117	Not Used			
IC118	PQVINJM4558D	IC	S	1
IC119-124	Not Used			
IC125-130	PQVIM402101P	IC		6
IC131-135	Not Used			
IC136	PQVI671152F	IC		1
IC200A,200B ,200C	PQVINJM4558D	IC	S	3
IC201A,201B ,201C	PQVIPD4066BC	IC	S	3
IC900,901 ,902	PQVINJM4558D	IC	S	3
IC903	PQVIBU3140	IC		1
		(TRANSISTORS)		
Q114,115 ,116	DTC143XA	Transistor (Si)		3
Q117,118	DTC144A	Transistor (Si)	S	2
Q119,120	DTA143A	Transistor (Si)	S	2
Q131,132	2SC2021	Transistor (Si)		2
Q200A,200B ,200C	2SA1626	Transistor (Si)	⚠	3
Q201A,201B ,201C	2SC2235	Transistor (Si)	⚠	3
Q202A,202B ,202C,203A ,203B,203C ,204A,204B ,204C,205A ,205B,205C	DTC144A	Transistor (Si)	S	12
Q210A,210B ,210C	DTA124XA	Transistor (Si)		3
Q300A-300H	2SB644	Transistor (Si)		8
Q301A-301H	2SD639	Transistor (Si)		8
Q302A-302H	PQVTDTC114Y	Transistor (Si)		8
Q303A-303H	DTA143A	Transistor (Si)	S	8
Q304A-304H	2SC2021	Transistor (Si)		8
Q305A-305H	2SA937	Transistor (Si)		8
Q306	2SD1406	Transistor (Si)		1
Q307	DTC144A	Transistor (Si)	S	1
Q900	2SC2021	Transistor (Si)		1
Q901	2SC2878	Transistor (Si)		1

Ref. No.	Part No.	Part Name & Description		Pcs
		(DIODES)		
D101	MA4091	Diode (Si)		1
D102-105	Not Used			
D106-109	1SS131	Diode (Si)		4
D110	Not Used			
D111	1SS131	Diode (Si)		1
D112	MA4039	Diode (Si)		1
D113,114	Not Used			
D115	1SV124	Diode (Si)		1
D116,117	1SS131	Diode (Si)		2
D200A,200B ,200C	PQVDS1YB40F1	Diode (Si)	⚠	3
D201A,201B ,201C	PQVDHZS2B1	Diode (Si)	⚠	3
D202A-202C	Not Used			
D203A,203B ,203C,204A ,204B,204C	1SS131	Diode (Si)		6
D205A,205B ,205C,206A ,206B,206C	MA4047	Diode (Si)		6
D207A-209C	Not Used			
D210A,210B ,210C	1SS131	Diode (Si)		3
D300A-300H ,301A-301H	MA4047	Diode (Si)		16
D302A-302H ,303A-303H ,304A-304H ,305A-305H ,306A-306H ,307A-307H	1SS131	Diode (Si)		48
D308A-308H	MA4030	Diode (Si)		8
D309A-309H ,310A-310H ,311A-311H ,312A-312H	1SS131	Diode (Si)		32
D390	1SS131	Diode (Si)		1
D902,903	1SS131	Diode (Si)		2
		(VARISTORS)		
ZNR20A,20B ,20C	ERZC07DK820	Varistor	⚠	3
ZNR30A-30H ,31A-31H	ERZC03DK241	Varistor		16
SA20A,20B ,20C,21A ,21B,21C ,22A,22B ,22C	PQVDSAE310F1	Surge Absorber	⚠	9
		(CRYSTAL OSCILLATORS)		
X100	PQVCK6000N3Z	Crystal Oscillator		1
X101	PQCVX3579H5R	Crystal Oscillator	S	1
X102	PQVCX4000N8Z	Crystal Oscillator	S	1
X103	PQVCL3276N4Z	Crystal Oscillator		1
		(COMPONENT COMBINATIONS)		
Z100,101 ,102	EXBP88473K	Resistor Array	S	3
Z107	PQRS8B3223J	Resistor Array		1
Z110	EXBP88222K	Resistor Array	S	1

Ref. No.	Part No.	Part Name & Description		Pcs
		(COILS)		
L100-103	ELEPK820KA	Choke Coil	S	4
L104	PQLQZM2R2M	Choke Coil	S	1
L105-109	Not Used			
L110,111 ,120 ,300B-300H ,301A-301H ,302A-302H ,303A-303H	PQLQZM2R2M	Choke Coil	S	35
L200A,200B ,200C,202A ,202B,202C	PQLQZK101K	Choke Coil	⚠	6
L201A,201B ,201C,203A ,203B,203C	PQLQZK2R2K	Choke Coil	⚠	6
L304	ELEA100KA	Choke Coil		1
		(TRANSFORMERS)		
T100,101	PQLT2D6B	Interface Transformer		2
T200A,200B ,200C ,300A-300H	ETA14Y85AY	Interface Transformer	⚠	11
T301A-301H	ETE13K38AY	Pulse Transformer		8
		(SWITCHES)		
SW100	PQSH1A12Z	Switch, Reset		1
SW101	PQSS2A20Z	Switch, System Program		1
		(RELAYS)		
RLY10A,10B ,10C	PQSL49Z	Relay		3
RLY30A-30H	PQSL41Z	Relay		8
		(VARIABLE CAPACITOR)		
VC100	PQCVTZB30B	Trimmer		1
		(THERMISTORS)		
TH1	PQRRTS104U	Thermistor		1
TH2	PQRRTS203U	Thermistor		1
		(PHOTO ELECTIC TRANSDUCERS)		
PC200A ,200B,200C	PQVITLP520	Photo Coupler	⚠	3
PC201A ,201B,201C	PQVITLP627	Photo Coupler	⚠	3
PC202A ,202B,202C ,300A-300H	PQVITLP521	Photo Coupler	⚠ S	11
		(RESISTORS)		
C101	ECEA1EU101	100		1
C102-106	Not Used			
C107	ECQM1H472JV	0.0047		1
C108,109	Not Used			
C110,111	ECKD1H103KB	0.01	S	2
C112,113	ECCD1H150JC	15P	S	2
C114,115	ECCD1H470JC	47P		2
C116,117	Not Used			
C118	ECEA1HU100	10		1
C119,120	Not Used			
C121	ECKD1H223MD	0.022	S	1
C122,123	ECQV1H104JZ	0.1		2

Ref. No.	Part No.	Part Name & Description		Pcs
C124	ECKD1H103KB	0.01	S	1
C125,126 ,127	ECQV1H104JZ	0.1		3
C128-129	Not Used			
C130	ECKD1H102JA	0.001	S	1
C131-134	Not Used			
C135,136	ECKD1H223MD	0.022	S	2
C138	ECQV1H104JZ	0.1		1
C139	ECKD1H223MD	0.022	S	1
C140	Not Used			
C141,142	ECQV1H104JZ	0.1		2
C143	Not Used			
C144	ECKD1H223MD	0.022	S	1
C145-147	Not Used			
C148,149	ECKD1H223MD	0.022	S	2
C149	Not Used			
C150	ECQV1H104JZ	0.1		1
C151,152	Not Used			
C153	ECCD1H151JC	150P	S	1
C154	Not Used			
C155	ECQV1H104JZ	0.1		1
C156	ECKD1H223MD	0.022	S	1
C157-159	Not Used			
C160	ECKD1H223MD	0.022	S	1
C161	ECQV1H104JZ	0.1		1
C162	ECEA1EU101	100	S	1
C163	ECQV1H104JZ	0.1		1
C164-167	Not Used			
C168	ECEA1CSS332	3300		1
C169,170	ECEA1EU470	47		2
C171-179	Not Used			
C180	ECQV1H104JZ	0.1		1
C190	ECEA1HU2R2	2.2		1
C200A,200B ,200C	ECQE2E474KZ	0.47	⚠	3 1
C201A,201B ,201C	ECEA1HU220	22		3
C202A,202B ,202C	ECEA1HU100	10	⚠	3
C203A,203B ,203C	ECEA1HU220	22	⚠	3
C204A,204B ,204C	ECQV1H333JZ	0.033		3
C205A,205B ,205C,206A ,206B,206C	ECQV1H563JZ	0.056		6
C207A,207B ,207C	ECCD1H121KC	120P		3
C208A,208B ,208C,209A ,209B,209C	ECQM1H183JV	0.018		6
C210A,210B ,210C,211A ,211B,211C	ECQV1H563JZ	0.056		6
C212A,212B ,212C	ECCD1H121KC	120P		3
C220A,220B ,220C	ECKDKC222KB	0.0022	⚠	3
C221A,221B ,221C	ECKD1H102JA	0.001	S	3
C240A,240B ,240C	ECKD1H223MD	0.022	S	3
C250	ECEA1EU102	1000		1
C300A-300G	ECEA1HU2R2	2.2		7
C300H	ECEA1HKS2R2	2.2		1
C301A-301H ,302A-302H	ECEA1HU3R3	3.3	S	16
C303A-303H	ECEA1HU010	1		8
C304A-304H ,305A-305H	ECKD1H103KB	0.01	S	16

Ref. No.	Part No.	Value		Pcs
C306A-306H	ECEA1HU010	1		8
C390	ECEA1EU101	100		1
C500-504	ECKD1H223MD	0.022	S	5
C511,512 ,513	ECQV1H273JZ	0.027		3
C900	ECQV1H473JZ	0.047		1
C901	ECQV1H104JZ	0.1		1
C902	ECQM1H332JV	0.0033		1
C903	ECQV1H683JZ	0.068		1
C904	ECQV1H104JZ	0.1		1
C905	ECQM1H682JV	0.0068		1
C906,907	Not Used			
C908	ECQM1H222JV	0.0022		1
C909	ECKD1H102JA	0.001	S	1
C910,911	ECEA1HU4R7	4.7		2
C912	ECQV1H333JZ	0.033		1
C913	ECKD1H102JA	0.001	S	1
C914-916	Not Used			
C917	ECEA1EU470	47		1
C918	ECQM1H332JV	0.0033		1
C919	Not Used			
C920	ECCD1H681KB	680P		1
C921	ECCD1H151JC	150P	S	1
		(RESISTORS)		
R101	ERD16TJ272	2.7k		1
R102-105	Not Used			
R106	ERD16TJ821	820		1
R107-109	Not Used			
R110-118	ERD16TJ151	150		9
R119-121	Not Used			
R122	ERD16TJ103	10k		1
R123	ERD16TJ223	22k		1
R124	Not Used			
R125	ERD16TJ105	1M		1
R126	ERD16TJ222	2.2k		1
R127,128	ERD16TJ103	10k		2
R129	ERD16TJ561	560		1
R130	ERD16TJ681	680		1
R131	ERD16TJ103	10k		1
R132	Not Used			
R133,134	ERD16TJ473	47k		2
R135	Not Used			
R136	ERD16TJ103	10k		1
R137	ERD16TJ223	22k		1
R138,139	Not Used			
R140	ERD16TJ104	100k		1
R141	ERD16TJ333	33k		1
R142	ERD16TJ334	330k		1
R143	ERD16TJ104	100k		1
R144	ERD16TJ333	33k		1
R145	ERD16TJ334	330k		1
R146	ERD16TJ472	4.7k		1
R147	ERD16TJ683	68k		1
R148,149	Not Used			
R150	ERD16TJ102	1k		1
R151	ERD16TJ333	33k		1
R152	ERD16TJ223	22k		1
R153,154	ERD16TJ102	1k		2
R155-158	ERD16TJ103	10k		4
R159	ERD16TJ472	4.7k		1
R160	ERD16TJ103	10k		1
R161	ERD16TJ472	4.7k		1
R162	ERD16TJ103	10k		1
R163	ERD16TJ472	4.7k		1
R164	ERD16TJ103	10k		1
R165-168	Not Used			
R169,170	ERD16TJ223	22k		2
R171,172	Not Used			

Ref. No.	Part No.	Part Name & Description	Pcs
R173	ERD16TJ151	150	1
R174	ERD16TJ225	2.2M	1
R175	ERD16TJ154	150k	1
R176	ERD16TJ223	22k	1
R177-184	Not Used		
R185	ERD16TJ103	10k	1
R186-189	Not Used		
R190,191	ERD16TJ103	10k	2
R192	ERD16TJ102	1k	1
R193	Not Used		
R194,195	ERD16TJ472	4.7k	2
R200A,200B ,200C	PQRD12TJ223	22k ⚠ S	3
R201A,201B ,201C	ERD16TJ122	1.2k ⚠	3
R202A,202B ,202C	ERD16TJ104	100k ⚠	3
R203A,203B ,203C	ERD16TJ472	4.7k ⚠	3
R204A,204B ,204C	ERD16TJ5R6	5.6 ⚠	3
R205A-205C	Not Used		
R206A,206B ,206C	ERD16TJ103	10k ⚠	3
R207A,207B ,207C	ERD16TJ472	4.7k ⚠	3
R208A,208B ,208C	ERD25TJ390	39 ⚠ S	3
R209A,209B ,209C	ERD16TJ102	1k	3
R210A,210B ,210C	ERD16TJ103	10k	3
R211A,211B ,211C	ERD16TJ392	3.9k	3
R212A,212B ,212C	ERD16TJ122	1.2k	3
R213A,213B ,213C	ERD16TJ152	1.5k	3
R214A,214B ,214C	ERD16TJ471	470	3
R215A,215B ,215C	ERD16TJ122	1.2k	3
R216A,216B ,216C,217A ,217B,217C	ERO16CKF1003	100k	6
R218A,218B ,218C,219A ,219B,219C ,220A,220B ,220C	ERO16CKF3003	300k	9
R221A,221B ,221C,222A ,222B,222C ,223A,223B ,223C	ERD16TJ122	1.2k	9
R224A,224B ,224C,225A ,225B,225C	ERD16TJ471	470	6
R226A,226B ,226C	ERD16TJ122	1.2k	3
R227A,227B ,227C,228A ,228B,228C	ERO16CKF1003	100k	6
R229A,229B ,229C	ERO16CKF3003	300k	3
R230A-230C	Not Used		
R231A,231B ,231C,232A ,232B,232C	ERD16TJ473	47k	6

Ref. No.	Part No.	Part Name & Description	Pcs
R233A,233B ,233C,234A ,234B,234C	ERD16TJ473	47k	6
R235A,235B ,235C	ERD16TJ823	82k	3
R300A-300H	ERD16TJ220	22	8
R301A-301H	ERD16TJ682	6.8k	8
R302A-302H	ERD16TJ220	22	8
R303A-303H	ERD16TJ682	6.8k	8
R304A-304H	ERD16TJ470	47	8
R305A-305H	ERD16TJ154	150k	8
R306A-306H	ERD16TJ103	10k	8
R307A-307H	ERD16TJ121	120	8
R308A-308H	ERD16TJ121	120	8
R309A-309H	ERD16TJ101	100	8
R310A-310H	ERD16TJ222	2.2k	8
R311A-311H	ERD16TJ472	4.7k	8
R312A-312H	ERD16TJ3R3	3.3	8
R319A-319H	ERD16TJ102	1k	8
R320A-320H	PQRD2TJ102	1k	8
R330A-330H	ERD16TJ221	220	8
R390	ERD16TJ822	8.2K	1
R391,392	ERD16TJ103	10k	2
R399	ERD16TJ562	5.6k	1
R500,501 ,502	ERO16CKF1151	1.15k	3
R503-510	ERO16CKF49R9	49.9	8
R511,512 ,513	ERO16CKF6491	6.49k	3
R514-521	ERO16CKF1101	1.1k	8
R522,523	ERO16CKF1151	1.15k	2
R900,901 ,902	ERD16TJ104	100k	3
R903	ERD16TJ224	220k	1
R904	ERD16TJ124	120k	1
R905-911	Not Used		
R912,913 ,914	ERD16TJ103	10k	3
R915-918	Not Used		
R919	ERD16TJ123	12K	1
R920	ERD16TJ103	10k	1
R921	ERD16TJ563	56k	1
R922	ERD16TJ102	1k	1
R923	ERD16TJ223	22k	1
R924	ERD16TJ273	27k	1
R925	ERD16TJ681	680	1
R926	ERD16TJ103	10k	1
R927	ERD16TJ183	18k	1
R928	ERD16TJ103	10k	1
R929	ERD16TJ274	270k	1
R930	ERD16TJ222	2.2k	1
R931	ERD16TJ334	330k	1
R932,933	ERD16TJ472	4.7k	2
R934,935	ERD16TJ332	3.3k	2
R950	ERD16TJ273	27k	1
R951	ERD16TJ393	39k	1
R999	ERD16TJ273	27k	1
		(OTHERS)	
E101	PQJJ1D3Z	Jack, External Music	1
E102	PQJJ1G1Z	Jack, Paging	1
E103	PQJJ1TA3Y	Jack,CO (MJ1A, MJ1B, MJ1C) ⚠	3
E104	PQJJ1TB16Z	Jack, Station Modular (MJ2A-2H)	8
E105	PQJP14D49Z	Connector Plug, 14P (CN7)	1
E106	PQJP2F4Z	Connector Plug, 2P	1
E107	PQJP4D14Z	Connector Plug, 4P (CN6)	1
E108	PQJP7G3Z	Connector Plug, 7P (CN5)	1
E109	PQJP8D3Z	Connector Plug, 8P (CN4)	1
E110	PQJP3D9Z	Connector Plug, 3P (CN8)	1

Ref. No.	Part No.	Part Name & Description		Pcs
POWER REGULATOR BOARD PARTS				
PCB2	PQWP230810M1	Power Regulator P.C. Board Ass'y (NLA)		1
		(ICs)		
IC1	AN78L18	IC	S	1
IC2	Not Used			
IC3	AN78M12F	IC	S	1
IC4,5	Not Used			
IC6	PQVIPD4066UC	IC	S	1
IC7,8	AN78M15F	IC	S	2
		(TRANSISTORS)		
Q1	2SD1275	Transistor (Si)		1
Q2	2SD637	Transistor (Si)		1
Q3	2SD1406	Transistor (Si)		1
Q4,5	2SC2021	Transistor (Si)		2
Q6	DTC143XA	Transistor (Si)		1
Q7,8	2SD1406	Transistor (Si)		2
Q9,10	DTC144A	Transistor (Si)	S	2
		(DIODES)		
D1	PQVD2B4B41	Diode (Si)		1
D2	PQVDMI151	Diode (Si)		1
D3,4	1SR35-200	Diode (si)	S	2
D5	Not Used			
D6	MA1068	Diode (si)	S	1
D7	MA4200	Diode (Si)		1
D8	Not Used			
D9,10,11	1SR35-200	Diode (si)	S	3
D12	MA4091	Diode (Si)		1
D13	MA4062	Diode (Si)		1
D14,15	1SR35-200	Diode (si)	S	2
D16	Not Used			
D17	1SR35-200	Diode (si)	S	1
D18	MA4051	Diode (Si)		1
D19	1SS131	Diode (Si)		1
		(RELAY)		
RLY1	PQSL50Z	Relay		1
		(CAPACITORS)		
C3	EECW0H104ZN	100000		1
C4	Not Used			
C5	ECET35S222SW	2200		1
C6	ECET50S682SW	6800		1
C7	ECET35S222SW	2200		1
C8	ECEA1HU101	100		1
C9	ECEA1VU471	470		1
C10	Not Used			
C11	ECEA1EU101	100		1
C12	Not Used			
C13	ECEA1EU331	330		1
C14	ECEA1HU100	10	S	1
C15,16	ECKD1H103KB	0.01		2
C17	ECEA1AU222	2200	S	1
C18	ECEA1HU100	10	S	1
C19	ECEA2AN100	10		1
C20	Not Used			
C21	ECEA1HU101	100		1

Pcs	Ref. No.	Part Name & Description	Pcs
		(RESISTORS)	
R1	ERD16TJ332	3.3k	1
R2	ERD16TJ102	1k	1
R3	ERD16TJ472	4.7k	1
R4	ERD16TJ332	3.3k	1
R5	ERD16TJ122	1.2k	1
R6	ERD16TJ102	1k	1
R7	ERD16TJ472	4.7k	1
R8	ERD16TJ223	22k	1
R9,10	ERD16TJ683	68k	2
R11,12	PQRD2VJ2R7	2.7	2
R13	ERD16TJ102	1k	1
R14	Not Used		
R15	ERD16TJ471	470	1
R16	ERD16TJ472	4.7k	1
R17	ERD16TJ223	22k	1
R18	ERD16TJ473	47k	1
R19	ERD16TJ332	3.3k	1
R20	ERD16TJ822	8.2k	1
R21	ERD16TJ274	270k	1
R22,23,24	Not Used		
R25,26	ERD16TJ272	2.7k	2
R27,28	ERD16TJ223	22k	2
R29,30	PQRD1VJ3R3	3.3	2
R31	PQRD12TJ101	100	1
		(OTHERS)	
E1	XBA1C15NU100	Fuse (F2,F3)	2
E2	PQJP5D30Z	Connector Plug, 5P (CN1)	1
E3	PQJP5D48Z	Connector Plug, 5P (CN2)	1
E4	PQJP5D7Z	Connector Plug, 5P (CN3)	1
E5	PQJS7L30Z	Connector Socket, 7P (w/Lead) (J5)	1
E6	PQJS8L30Z	Connector Socket, 8P (w/Lead) (J4)	1
E7	PQJS3L32Z	Connector Socket, 3P (J8)	1
LED BOARD PARTS			
PCB3	PQWP3T30810M	LED P.C. Board Ass'y (NLA)	1
		(DIODES)	
D800	LN220RPH	LED	1
D801	LN420YPH	LED	1
D802	LN320GPH	LED	1
		(OTHERS)	
E800	PQJS4R31Z	Connector Socket, 4P (w/Lead) (J6)	1
E801	PQHR402Z	Spacer, LED	1

Pcs	Ref. No.	Part Name & Description	Pcs
		POWER SUPPLY PARTS	
PCB4	PQWP4T30810M	Power P.C. Board Ass'y (NLA) (with/ C601,C602,C604,C605, ZNR600, L600, E603, E604 and E606)	1
		(CAPACITORS)	
C601,602	ECKDKC222KB	0.0022 ⚠ S	2
C604,605	ECQU1A473MH	0.047 ⚠	2
		(VARISTOR)	
ZNR600	ERZC14DK431U	Varistor ⚠	1
		(SWITCH)	
SW1	EST15704V	Switch, Power ⚠	1
		(TRANSFORMERS)	
T1	PQLT5M9M4A	Power Transformer ⚠	1
T2	PQLT1K9M1A	Bell Transformer	1
		(COIL)	
L600	PQLE61	Coil ⚠	1
		(OTHERS)	
E600	PQWAT616M	Power Cord Assembly ⚠	1
E601	PQUV36Y	Power Box Cover	1
E602	PQUV37Y	Power Box	1
E603	PQJP7C1Z	Connector Plug, 7P ⚠	1
E604	PQJS5L30Z	Connector Socket, 7P (w/Lead) ⚠ (J3)	1
E605	PQMD4012Z	Bracket, Power Box	1
E606	XBA2F15NU2	Fuse ⚠	1
E607	PQQT4181Z	Label	1

ORDER NO. KMS9802249S3

Service Manual

Supplement-2

EASA-PHONE

ELECTRONIC MODULAR
SWITCHING SYSTEM

KX-T30810B-3

(for Asia, Middle Near East and Other areas)

Please file and use this supplement manual together with the service manual for Model No. KX-T30810B-3 (for Asia, Middle Near East and Other areas), Order No. KM49208241A3.

⚠ WARNING

This service information is designed for experienced repair technicians only and is not designed for use by the general public.
It does not contain warnings or cautions to advise non-technical individuals of potential dangers in attempting to service a product.
Products powered by electricity should be serviced or repaired only by experienced professional technicians.
Any attempt to service or repair the product or products dealt with in this service information by anyone else could result in serious injury or death.

CHANGES

Subject:

Suffix	Reason for suffix change
A → B	Change of the software (IC101 ROM version: Y121P → Y121S). Parts list is no change.
B → C	Addition of surge absorber on the main board and for automatic insert machine.
C → D	Change of ROM (IC101: EPROM → MASKROM). There is no change in the parts list.
D → E	Addition of Jumper wire for pattern mistake on the main board. (Parts list is no change).
E → F	Not used.
F → G	Change of power cord.
G → H	Improve performance of reversed electrical current.
H → I	Change of the software (IC101 ROM version: Y121S → Y211M). Parts list is no change.
I → J	Not used.
J → K	Change of the main board.
K → L	Change of the crosspoint switches.
L → M	Change of ROM (IC101: MASKROM → EPROM, version: Y211M → Y211V).
M → N	Change of the cushion material for standing the drop shock. (There is no change in the replacement parts list).

Suffix location:

(Example)

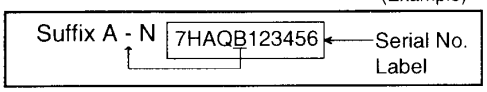

Panasonic

©1998 Kyushu Matsushita Electric Co., Ltd.
All rights reserved. Unauthorized copying and distribution is a violation of law.

■ REPLACEMENT PARTS LIST ..... Change from original pages 20-24.

Reason for Change	Following 1-8 reasons are indicated on the Notes in the bottom column.
1. Improve performance 2. Change of material or dimension 3. To meet approved specification 4. Standardization 5. Addition 6. Deletion 7. Correction 8. Other	**Note**: *1 The part with mark *1 have been changed at the same time. *2 The part with mark *2 have been changed at the same time. *3 The part with mark *3 is change of Ref. No.

Interchangeability Code	Following V-Z interchangeabilities are indicated on the Notes in the bottom column.	
	Parts / Set Production	Description
V	Original / New → Early (before change) / Late (after change)	Original or new parts may be used in early or late production sets. Use original parts until exhausted, then stock new parts.
W	Original → Early (before change) New → Late (after change)	Original parts may be used in early production sets only. New parts may be used in early or late production sets. Use original parts where possible, then stock new parts.
X	Original → Early (before change) New → Late (after change)	New parts only may be used in early or late production sets. Stock new parts.
Y	Original → Early (before change) New → Late (after change)	Original parts may be used in early production sets only. New parts may be used in late production sets only. Stock both original and new parts.
Z	Other	

Ref. No.	Part No.		Part Name & Description	Pcs	Remarks	Notes		Time of change (Suffix)
	Original Part	**New Part**						
CABINET & ELECTRICAL PARTS								
7	P-01H-F2G1	----------	BATTERY	0		6		I
8	PQUV50Z	**PQUV50T**	BATTERY COVER	1		1	X	I
ACCESSORIES AND PACKING MATERIALS								
A9	----------	**PSQW1143Z**	LEAFLET FOR ADDED FUNCTIONS	1		5		M
P3	PQPN9036Y	**PQPN9036X**	CUSHION COMPLETE (L, R SIDE)	1		7		
MAIN BOARD PARTS								
IC116	PQVITP5089N	**PQVIUM95089**	IC	1	*1	8	W	
IC125-130	PQVIM402101P	**MN6105**	IC	6		8	Y	J
IC201A-201C	PQVIPD4066BC	**PQVITC4066BF**	IC S	3		2	Y	I
Q200A-200C	2SA1626	**2SA1009A**	TRANSISTOR (SI) ⚠	3		1	W	C
	2SA1009A	**2SA1627**	TRANSISTOR (SI)	3		1	V	
Q201A-201C	2SC2235	**2SD1897**	TRANSISTOR (SI) ⚠	3		1	W	C
D115	1SV124	**JUMPER WIRE**	JUMPER WIRE	1		8	Y	
D116	1SS131	----------	DIODE	0		6		
D205A-205C	MA4047	----------	DIODE (SI)	0	*2	6		
D206A-206C	MA4047	----------	DIODE (SI)	0	*2	6		
D307A-307H	----------	**1SS131**	DIODE (SI)	8		5		C
D400-402	----------	**1SS131**	DIODE (SI) S	3		5		I
BAT1	----------	**CR23541GUF**	LITHIUM BATTERY	1		5		I
ZNR30A-30H	ERZC03DK241	**ERZTC5AK390**	VARISTOR	8		1	X	C
ZNR31A-31H	ERZC03DK241	**ERZTC5AK390**	VARISTOR	8		1	X	C
ZNR32A-32H	ERZC07DK820	**ERZTC5AK390**	VARISTOR	8		1	X	C
ZNR33A-33H	----------	**ERZTC5AK390**	VARISTOR	8		5		C
X101	PQVCX3579H5R	**PQVBFC3584A1**	CRYSTAL OSCILLATOR S	1		1	W	C
X103	PQVCL3276N4Z	**PQVCL3276N6Z**	CRYSTAL OSCILLATOR	1		8	W	
Z111	----------	**PQRSLD3X472J**	RESISTOR ARRAY S	1		5		C
	PQRSLD3X472J	----------	RESISTOR ARRAY S	0		6		H

Reason for Change

Interchangeability Code

Ref. No.	Part No.		Part Name & Description	Pcs	Remarks	Notes		Time of change (Suffix)
	Original Part	New Part						
L110,L111	PQLQZM2R2K	----------	CHOKE COIL	0		6		I
L200A-200C	PQLQZK101K	**PQLE106**	CHOKE COIL	3		1	Y	I
L202A-202C	PQLQZK101K	**PQLE106**	CHOKE COIL	3		1	Y	I
L301B-301C	----------	**ERDS2TJ0T**	RESISTOR, 0Ω	2		5		I
J202	----------	**ERDS2TJ0T**	RESISTOR, 0Ω	1		5		I
VC100	PQCVTZB30B	**ECRLA030E53**	TRIMMER	1		1	W	C
	ECRLA030E53	**ECCD1H180JC**	CAPACITOR, 18PF	1		8	W	
TH1	PQRRTS104U	----------	THERMISTOR	1		6		
TH2	PQRRTS203U	----------	THERMISTOR	1		6		
PC200A-200C	PQVITLP520	**0N3181R**	PHOTO COUPLER ⚠ S	3		1	Y	I
C107	ECQM1H472JV	**ECCD1H180JC**	CAPACITOR, 18PF	1		8	W	
C182-184	----------	**ECQV1H104JZ**	CAPACITOR, 0.1µF	3		5		C
	ECQV1H104JZ	----------	CAPACITOR, 0.1µF	0		6		I
C185	----------	**ECCD1H680JC**	CAPACITOR, 68PF	1		5		C
	ECCD1H680JC	----------	CAPACITOR, 68PF	0		6		I
C186-187	----------	**ECQV1H104JZ**	CAPACITOR, 0.1µF	2		5		C
	ECQV1H104JZ	----------	CAPACITOR, 0.1µF	0		6		I
C200A-200C	ECQE2E474KZ	**ECQE2224KF**	CAPACITOR, 0.22µF	3	*2	8	V	
C204A-204C	ECQV1H473MD	**ECUV1H333JC**	CAPACITOR, 0.033µF	3		1	Y	
C205A-205C	ECUV1H563MD	**PQCUV1E563MD**	CAPACITOR, 0.056µF	3		2	Y	I
C206A-206C	ECUV1H563MD	**PQCUV1E563MD**	CAPACITOR, 0.056µF	3		2	Y	I
C207A-207C	ECUV1H121JC	**PQCUV1H121JC**	CAPACITOR, 120PF	3		2	Y	I
	PQCUV1H121JC	**PQCUV1H680JC**	CAPACITOR, 68PF	3		1	Y	
C208A-208C	ECQM1H183JV	**PQCUV1H183KB**	CAPACITOR, 0.018µF	3		2	Y	I
	PQCUV1H183KB	----------	CAPACITOR, 0.018µF	0		6		
C209A-209C	ECUV1H183KB	**PQCUV1H183KB**	CAPACITOR, 0.018µF	3		2	Y	I
	PQCUV1H183KB	----------	CAPACITOR, 0.018µF	0		6		
C210A-210C	ECUV1H563MD	**PQCUV1E563MD**	CAPACITOR, 0.056µF	3		2	Y	I
C211A-211B	ECUV1H563MD	**PQCUV1E563MD**	CAPACITOR, 0.056µF	2		2	Y	I
C211C	ECUV1H563MD	----------	CAPACITOR, 0.056µF	0		6		I
C212A-212C	ECUV1H121JC	**PQCUV1H121JC**	CAPACITOR, 120PF	3		2	Y	I
	PQCUV1H121JC	**PQCUV1H680JC**	CAPACITOR, 68PF	3		1	Y	
C213A-213C	----------	**PQCUV1H680JC**	CAPACITOR, 68PF	3		5		
C214A-214C	----------	**PQCUV1H680JC**	CAPACITOR, 68PF	3		5		
C221A-221C	ECKD1H102JA	**PQCUV1H102J**	CAPACITOR, 0.001µF	3		2	Y	I
C307A-307H	----------	**ECQB1H393KF**	CAPACITOR, 0.039µF	8		1	Y	C
R106	ERDS2TJ821	----------	RESISTOR, 820Ω	0		6		I
R159	PQ4R18XJ472	**PQ4R18XJ473**	RESISTOR, 47kΩ	1		8	W	
R161	PQ4R18XJ472	**PQ4R18XJ473**	RESISTOR, 47kΩ	1		8	W	
R174	ERDS2TJ225	----------	RESISTOR, 2.2MΩ	0		6		
R175	ERDS2TJ154	----------	RESISTOR, 150kΩ	0		6		
R176	ERDS2TJ223	----------	RESISTOR,22kΩ	0		6		
R185	ERDS2TJ103	**PQ4R10XJ103**	RESISTOR, 10kΩ	1		2	Y	I
R196,R197	PQ4R18XJ222	----------	RESISTOR, 2.2kΩ	0	*3	6		I
R916,R917	----------	**PQ4R18XJ222**	RESISTOR, 2.2kΩ	1	*3	5		I
R201A-201C	ERDS2TJ122	**PQ4R10XJ332**	RESISTOR, 3.3kΩ	3		2	Y	I
R202A-202C	ERDS2TJ104	**PQ4R10XJ104**	RESISTOR, 100kΩ	3		2	Y	I
R204A-204C	ERDS2TJ5R6	----------	RESISTOR, 5.6Ω	0		6		I

Reason for Change

Interchangeability Code

KX-T30810B-3

Ref. No.	Part No.		Part Name & Description	Pcs	Remarks	Notes		Time of change (Suffix)
	Original Part	**New Part**						
R207A-207C	ERDS2TJ472	**PQ4R10XJ472**	RESISTOR, 4.7kΩ	3		2	Y	I
R210C	ERDS2TJ183	**PQ4R10XJ183**	RESISTOR, 18kΩ	1		2	Y	I
R211A-211C	ERDS2TJ392	**PQ4R10XJ392**	RESISTOR, 3.9kΩ	3		2	Y	I
R212A-212C	PQ4R18XJ122	**ERDS2TJ122**	RESISTOR, 1.2kΩ	3		2	Y	I
	ERDS2TJ122	**ERDS2TJ152**	RESISTOR, 1.5kΩ	3		1	Y	
R213A-213C	PQ4R18XJ122	**ERDS2TJ122**	RESISTOR, 1.2kΩ	3		2	Y	I
	ERDS2TJ122	**ERDS2TJ152**	RESISTOR, 1.5kΩ	3		1	Y	
R214A-214C	PQ4R18XJ391	**PQ4R10XJ391**	RESISTOR, 390Ω	3		2	Y	I
R215A-215C	PQ4R18XJ122	**PQ4R10XJ102**	RESISTOR, 1kΩ	3		2	Y	I
	PQ4R10XJ102	**PQ4R10XJ821**	RESISTOR, 820Ω	3		1	Y	
R216A-216C	ER016CKF1003	**PQ4R10XF1003**	RESISTOR, 100kΩ	3		2	Y	I
	PQ4R10XF1003	**PQ4R10XJ124**	RESISTOR, 120kΩ	3		1	Y	
R217A-217C	PQ4R18XF1003	**PQ4R10XF1003**	RESISTOR, 100kΩ	3		2	Y	I
	PQ4R10XF1003	**PQ4R10XJ124**	RESISTOR, 120kΩ	3		1	Y	
R218A-218C	PQ4R18XF3003	**ER016CKF3003**	RESISTOR, 300kΩ	3		2	Y	I
R222A-222C	ERDS2TJ122	**PQ4R10XJ122**	RESISTOR, 1.2kΩ	3		2	Y	I
R223A-223C	ERDS2TJ122	**PQ4R10XJ122**	RESISTOR, 1.2kΩ	3		2	Y	I
R224A-224C	ERDS2TJ471	**PQ4R10XJ471**	RESISTOR, 470Ω	3		2	Y	I
	PQ4R10XJ471	**PQ4R10XJ000**	RESISTOR, 0Ω	3		1	Y	
R225A-225C	ERDS2TJ471	**PQ4R10XJ471**	RESISTOR, 470Ω	3		2	Y	I
	PQ4R10XJ471	**PQ4R10XJ000**	RESISTOR, 0Ω	3		1	Y	
R227A-227C	ER016CKF1003	**PQ4R10XF1003**	RESISTOR, 100kΩ	3		2	Y	I
	PQ4R10XF1003	**PQ4R10XJ913**	RESISTOR, 91kΩ	3		1	Y	
R228A-228C	ER016CKF1003	**PQ4R10XF1003**	RESISTOR, 100kΩ	3		2	Y	I
	PQ4R10XF1003	**PQ4R10XJ913**	RESISTOR, 91kΩ	3		1	Y	
R234C	ERDS2TJ473	**PQ4R10XJ473**	RESISTOR, 47kΩ	1		2	Y	I
R235A-235C	ERDS2TJ683	**PQ4R10XJ683**	RESISTOR, 68kΩ	3		2	Y	I
R300A-300B	PQ4R18XJ220	**ERDS2TJ220**	RESISTOR, 22Ω	2		7		
R301A-301H	ERDS2TJ682	**PQ4R10XJ682**	RESISTOR, 6.8kΩ	8		2	Y	I
R303A-303H	ERDS2TJ682	**PQ4R10XJ682**	RESISTOR, 6.8kΩ	8		2	Y	I
R304A-304H	ERDS2TJ470	**PQ4R10XJ682**	RESISTOR, 6.8kΩ	8		2	Y	C
R340A-340H	----------	**ERDS2TJ680**	RESISTOR, 68Ω	8		5		C
R341A-341H	----------	**ERDS2TJ680**	RESISTOR, 68Ω	8		5		C
R361	----------	**PQ4R10XJ000**	RESISTOR, 0Ω	1		5		I
R363	----------	**PQ4R10XJ000**	RESISTOR, 0Ω	1		5		I
R374	----------	**PQ4R10XJ000**	RESISTOR, 0Ω	1		5		I
R702	ERDS2TJ102	**PQ4R10XJ102**	RESISTOR, 1kΩ	1		2	W	C
	PQ4R10XJ102	**ERDS2TJ102**	RESISTOR, 1kΩ	1		2	W	I
R919	ERDS2TJ123	**ERDS2TJ153**	RESISTOR, 15kΩ	1	*1	8	W	
	ERDS2TJ153	**ERDS2TJ123**	RESISTOR, 12kΩ	1		1	Y	
R921	ERDS2TJ563	**ERDS2TJ333**	RESISTOR, 33kΩ	1	*1	8	W	
	ERDS2TJ333	**ERDS2TJ223**	RESISTOR, 22kΩ	1		1	Y	
R999	ERDS2TJ183	**PQ4R10XJ183**	RESISTOR, 18kΩ	1		2	Y	I
E106	PQJP2F4Z	----------	CONNECTOR PLUG, 2P	1		6		I
POWER REGULATOR BOARD PARTS								
R4	ERDS2TJ332	**ER016CKF3301**	RESISTOR, 3.3kΩ	1		1	X	
R5	ERDS2TJ112	**ER016CKF1201**	RESISTOR, 1.2kΩ	1		1	X	
POWER SUPPLY PARTS								
E600	PQWAT616BX	**PQWAT616BX1**	POWER CORD ASSEMBLY	1		1	Y	G
E602	PQUV37Y	**PQUV37V**	POWER BOX	1		2	X	

Reason for Change

Interchangeability Code

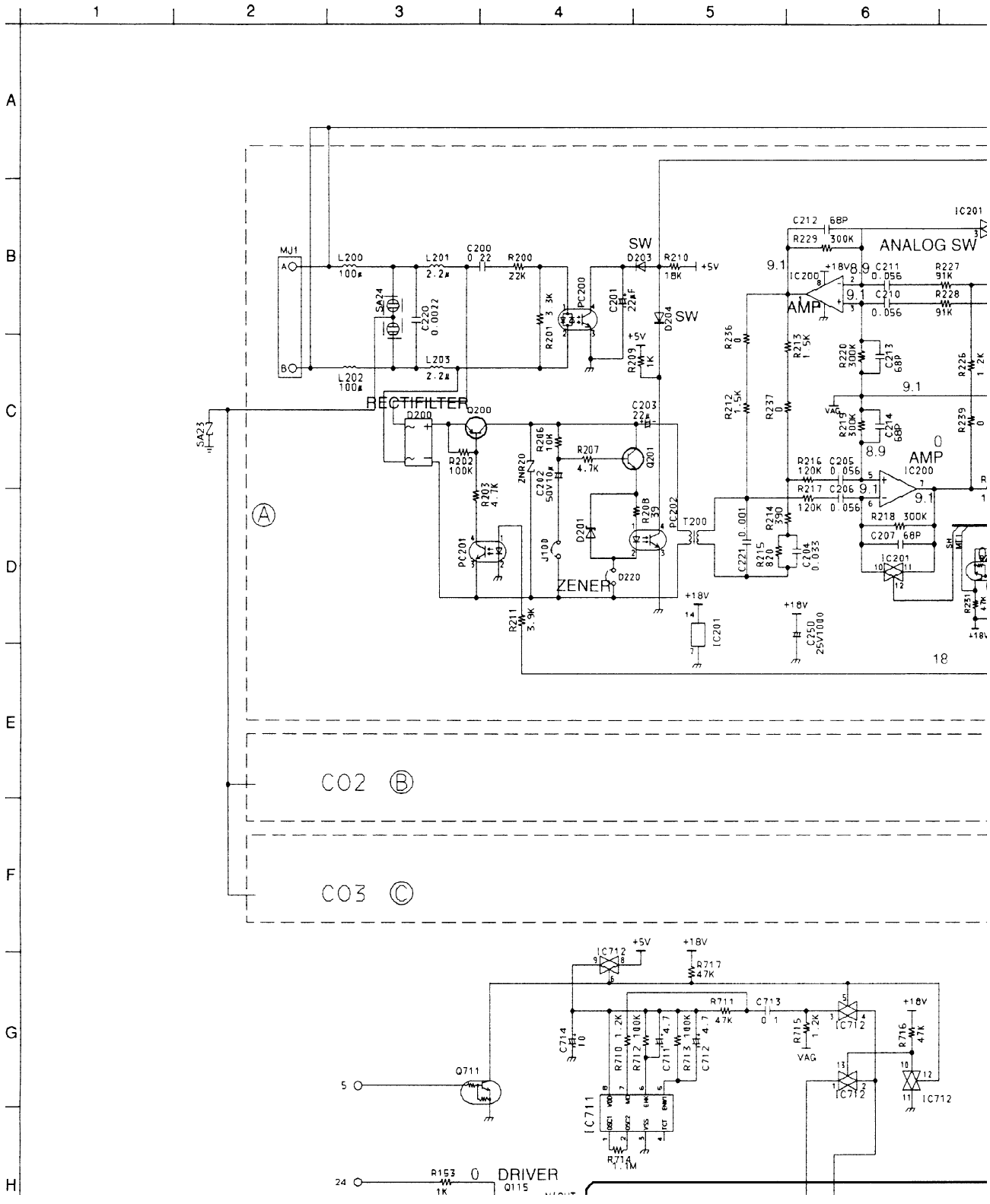
1
2
3
4
5
6
A
B
C
D
E
F
G
H
MJ1
L200
L201
L202
L203
C200
C201
C202
C203
R200
R201
R202
R203
R206
R207
R208
R209
R210
SW
D203
D204
PC200
PC201
PC202
Q200
Q201
D200
D201
D220
ZENER
T200
J100
RECTIFILTER
IC201
ANALOG SW
IC200
AMP
R211
R212
R213
R214
R215
R216
R217
R218
R220
R226
R227
R228
R229
R231
R236
R237
R239
C205
C206
C207
C210
C211
C212
C213
C214
C221
C250
VAG
+5V
+18V
CO2 B
CO3 C
IC711
IC712
Q711
R710
R711
R712
R713
R714
R715
R716
R717
C711
C712
C713
C714
R153
DRIVER
Q115

IEMATIC DIAGRAM (MAIN CIRCUIT) ..... Change from the original pages 13-15

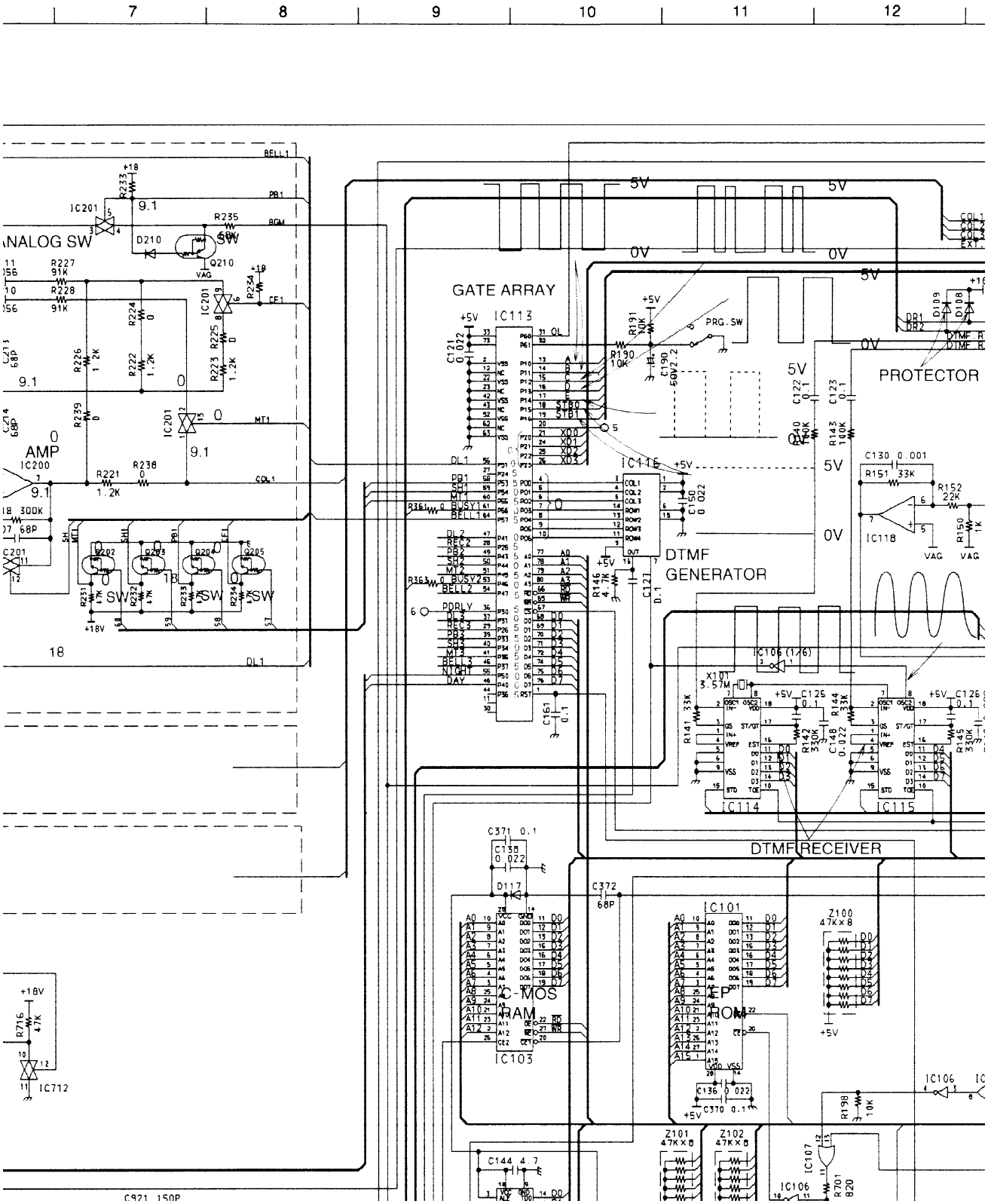

pages 13-15

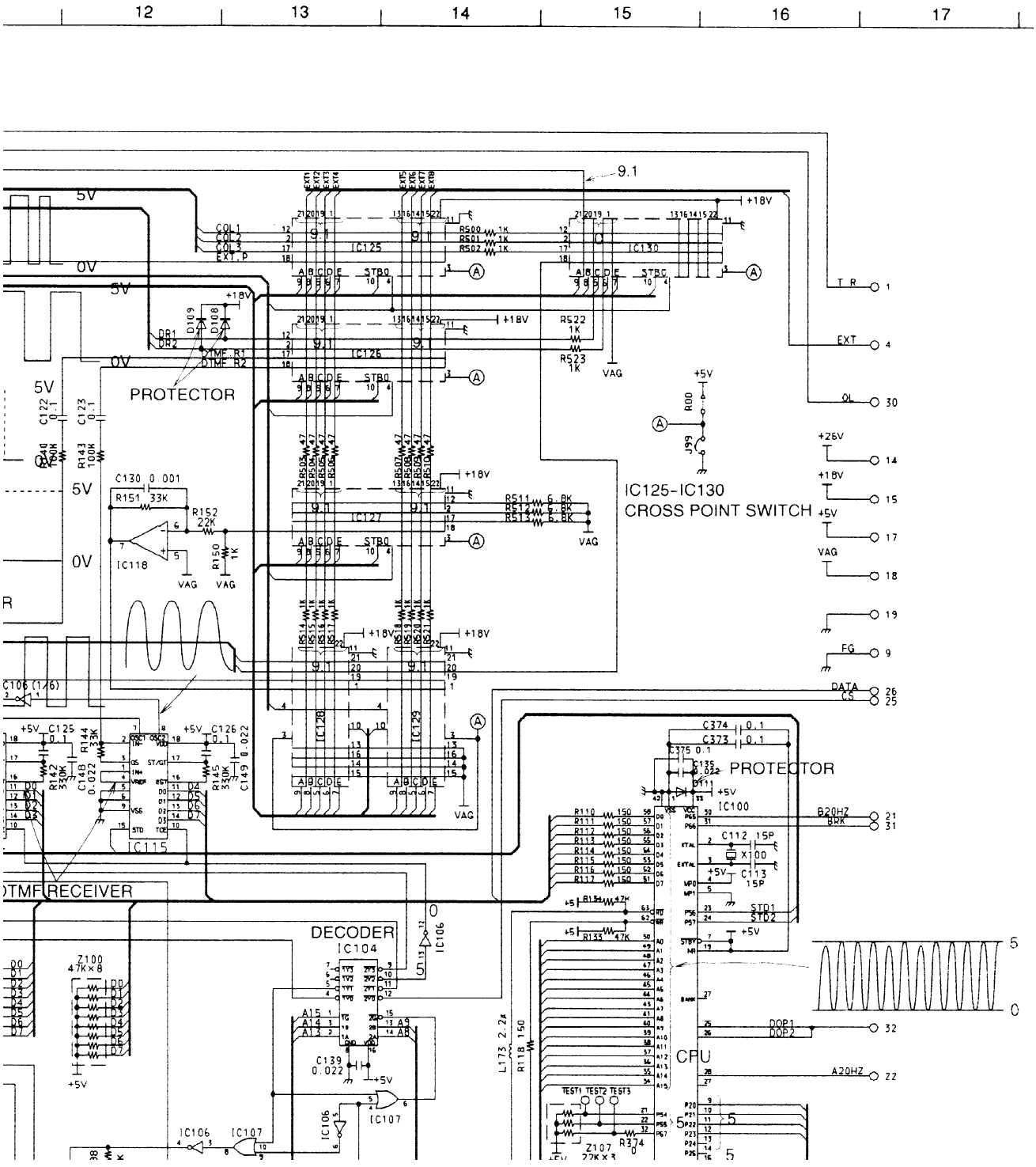
12
13
14
15
16
17
9.1
5V
0V
PROTECTOR
IC125
IC126
IC127
IC130
IC125-IC130
CROSS POINT SWITCH
IC118
IC115
DTMF RECEIVER
DECODER
IC104
IC106
IC107
IC100
CPU
PROTECTOR
T R
EXT
OL
FG
DATA
CS
B20HZ
A20HZ
DOP1
DOP2
STD1
STD2
VAG
+18V
+26V
+5V

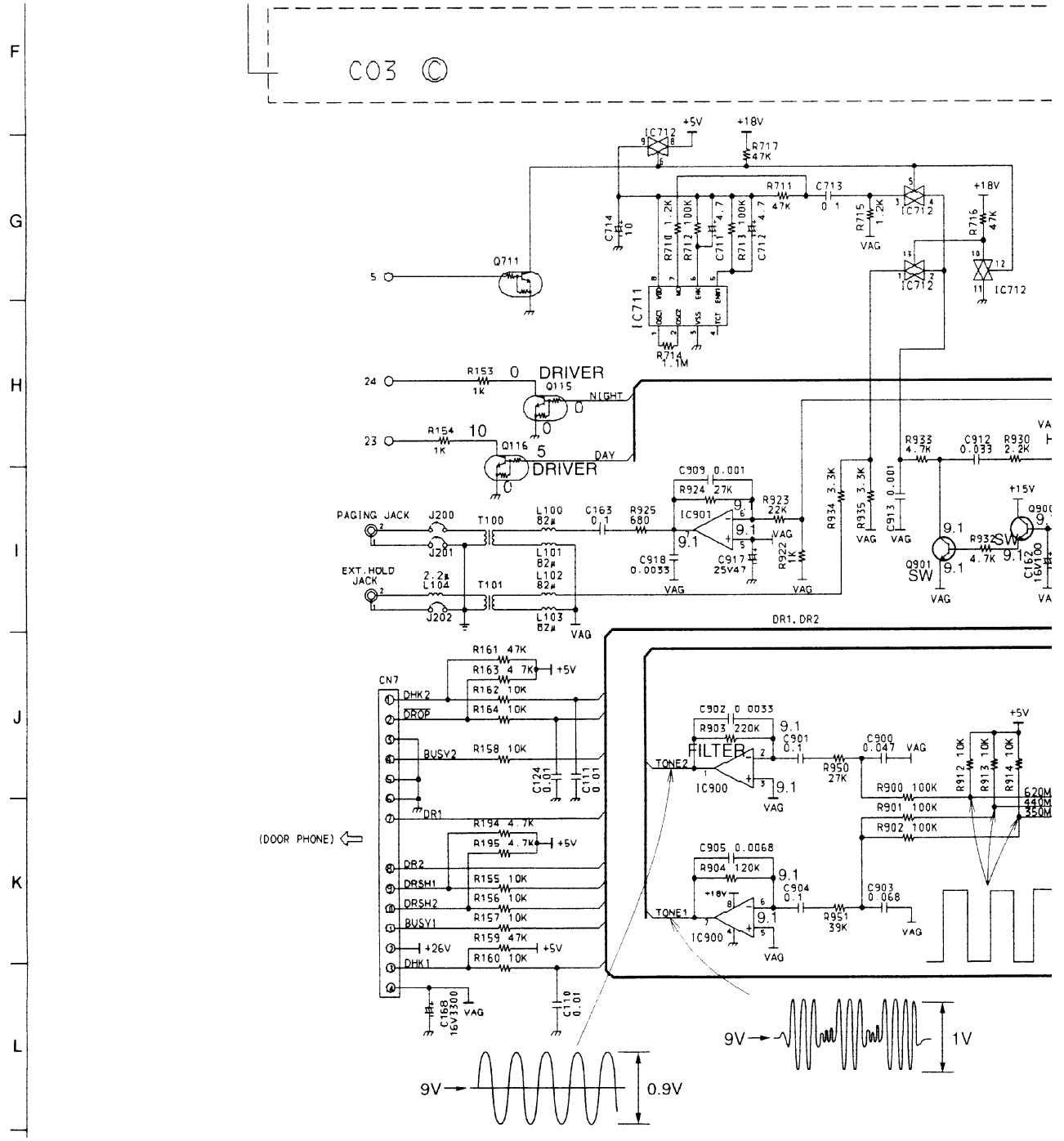
C03 ©
+5V
+18V
IC712
R717 47K
R711 47K
C713 0.1
R715 1.2K
VAG
R716 47K
Q711
IC711
R710 1.2K
R712 100K
C711 4.7
R713 100K
C712 4.7
C714 10
R714 1.1M
DRIVER
Q115
NIGHT
R153 1K
R154 1K
Q116
DAY
PAGING JACK
J200
J201
T100
L100 82μ
C163 0.1
R925 680
C909 0.001
R924 27K
IC901
R923 22K
R922 1K
C917 25V47
C918 0.0033
R934 3.3K
R935 3.3K
C913 0.001
R933 4.7K
C912 0.033
R930 2.2K
R932 4.7K
Q901
SW
C162 16V100
+15V
EXT.HOLD JACK
J202
T101
L101 82μ
L102 82μ
L103 82μ
L104 2.2μ
DR1, DR2
CN7
DHK2
DROP
BUSY2
DR1
DR2
DRSH1
DRSH2
BUSY1
+26V
DHK1
R161 47K
R163 4.7K
R162 10K
R164 10K
R158 10K
R194 4.7K
R195 4.7K
R155 10K
R156 10K
R157 10K
R159 47K
R160 10K
C124 0.01
C111 0.01
C110 0.01
C168 16V3300
(DOOR PHONE)
FILTER
IC900
TONE2
TONE1
C902 0.0033
R903 220K
C901 0.1
R950 27K
C900 0.047
R900 100K
R901 100K
R902 100K
R912 10K
R913 10K
R914 10K
620M
440M
350M
C905 0.0068
R904 120K
C904 0.1
R951 39K
C903 0.068
9V
0.9V
1V

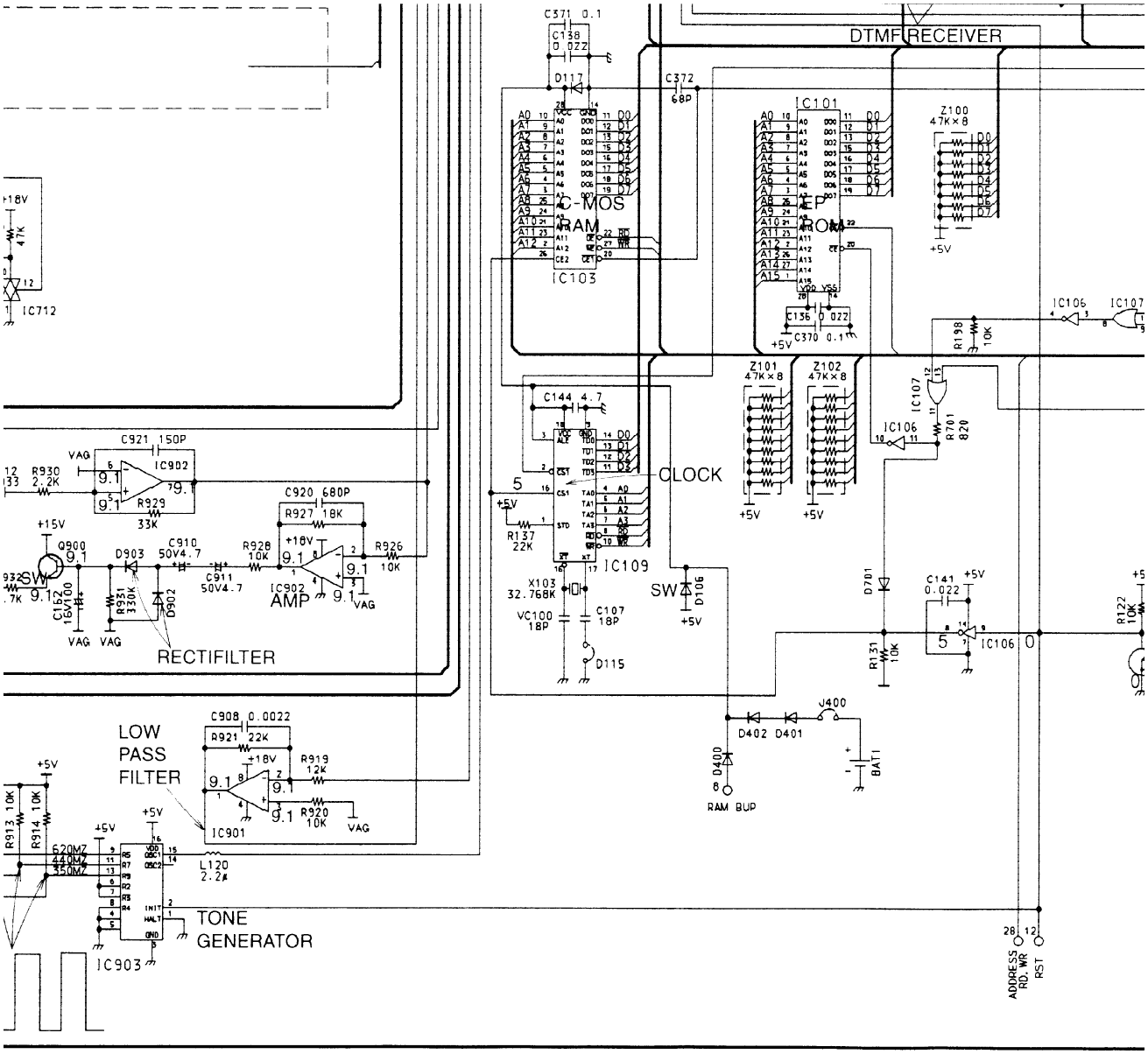
DTMF RECEIVER
C-MOS
RAM
IC103
IC101
EP
ROM
Z100
47K×8
Z101
47K×8
Z102
47K×8
CLOCK
IC109
IC106
IC107
IC712
C921 150P
IC902
R930
2.2K
R929
33K
C920 680P
R927 18K
R928
10K
R926
10K
IC902
AMP
Q900
SW
D903
C910
50V4.7
C911
50V4.7
R931
330K
D902
C162
16V100
RECTIFILTER
VAG
+15V
+18V
C144 4.7
R137
22K
X103
32.768K
VC100
18P
C107
18P
D115
SW
D106
D701
R131
10K
C141
0.022
R122
10K
J400
D402
D401
D400
RAM BUP
BAT1
LOW
PASS
FILTER
C908 0.0022
R921 22K
R919
12K
R920
10K
IC901
R913 10K
R914 10K
620MZ
440MZ
350MZ
L120
2.2μ
TONE
GENERATOR
IC903
ADDRESS
RD, WR
RST

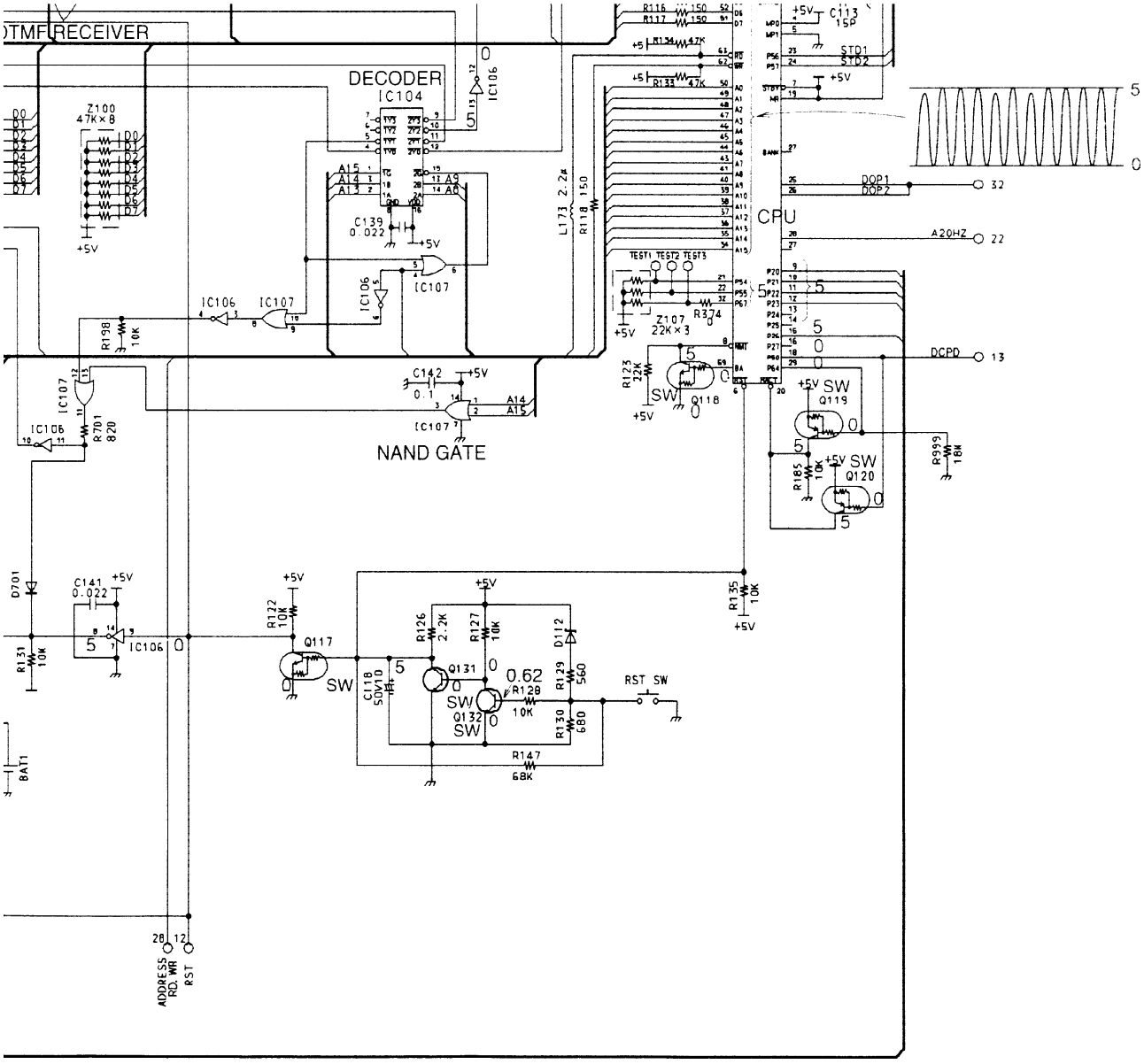

DTMF RECEIVER
DECODER
IC104
NAND GATE
CPU
Z100
47K×8
Z107
22K×3
C139
0.022
C142
0.1
C141
0.022
C113
15P
L173 2.2μ
R118 150
R116 150
R117 150
R134 47K
R133 47K
R374
R123 22K
R198 10K
R701 820
R185 10K
R999 18K
R135 10K
R122 10K
R126 2.2K
R127 10K
R129 560
R130 680
R128 10K
R147 68K
R131 10K
D701
D112
C118 50V10
Q117
Q118
Q119
Q120
Q131
Q132
0.62
SW
RST SW
BAT1
ADDRESS
RD. WR
RST
DOP1
DOP2
A20HZ
DCPD
STD1
STD2
TEST1 TEST2 TEST3

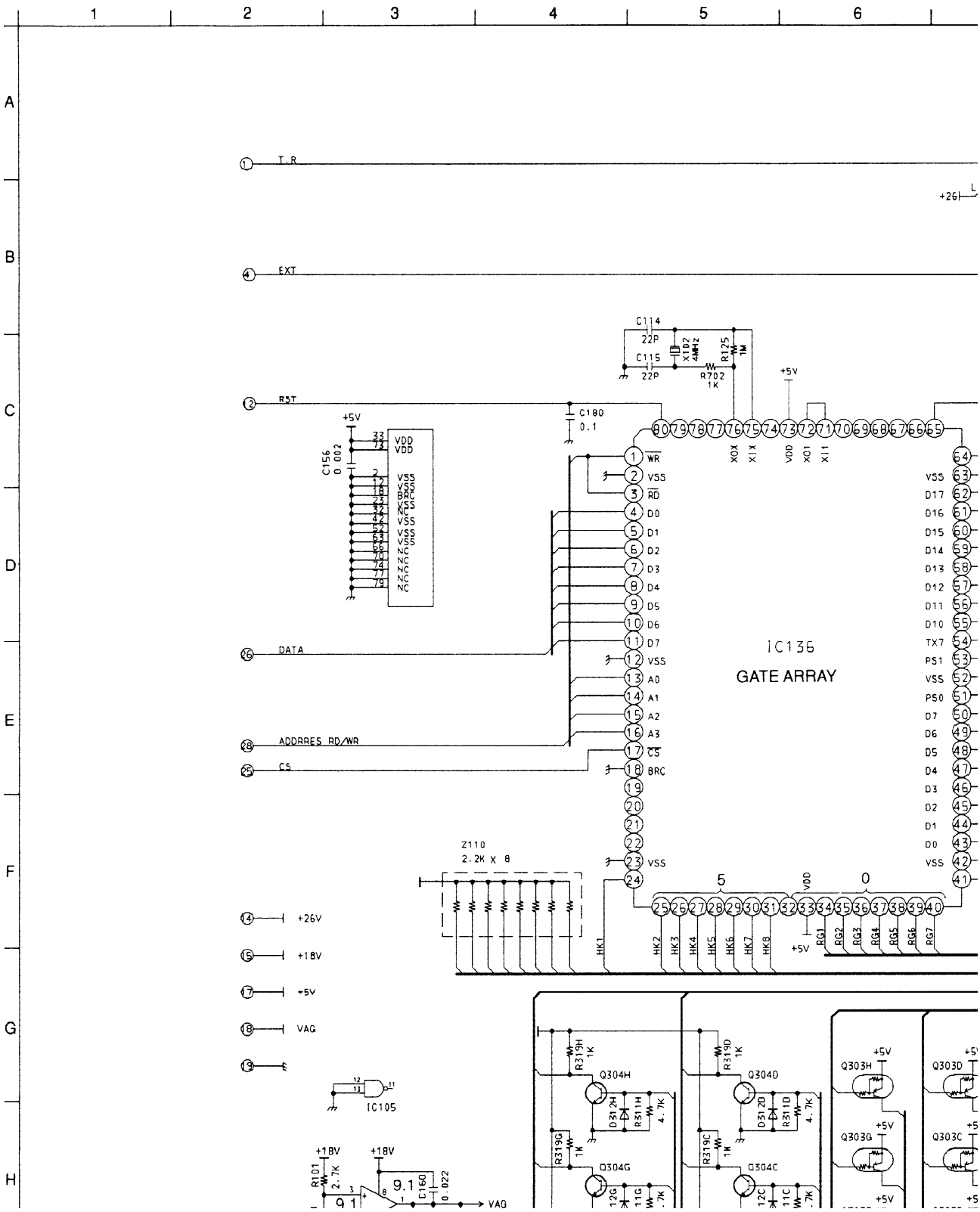
T.R
EXT
RST
DATA
ADDRES RD/WR
CS
+26V
+18V
+5V
VAG
C114
22P
C115
22P
X102
4MHz
R125
1M
R702
1K
C180
0.1
C156
0.002
IC136
GATE ARRAY
Z110
2.2K X 8
IC105
R101
2.7K
C160
0.022
9.1
Q304H
Q304D
Q304G
Q304C
Q303H
Q303D
Q303G
Q303C

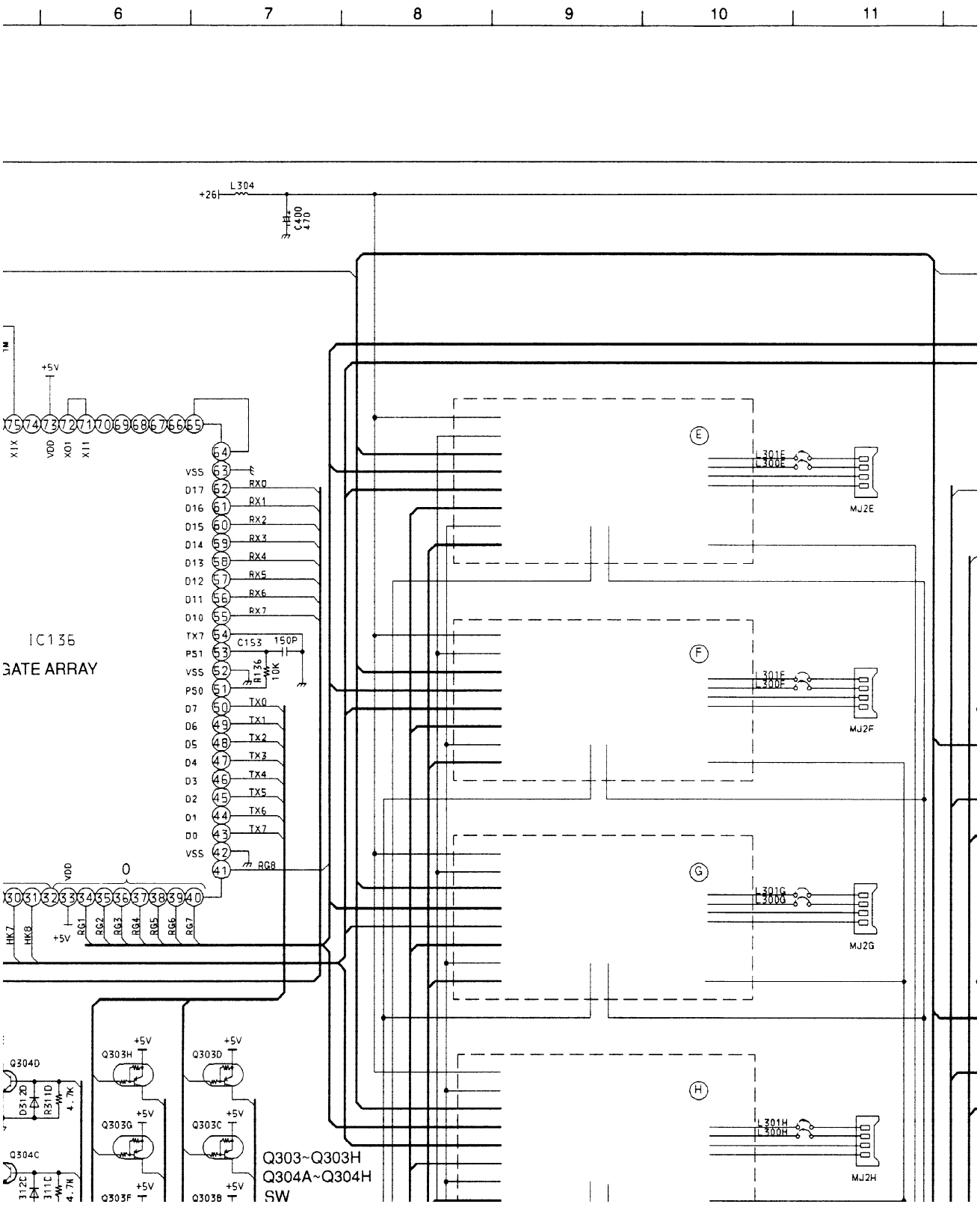
6
7
8
9
10
11
L304
C400
470
+5V
IC135
GATE ARRAY
VSS
D17
D16
D15
D14
D13
D12
D11
D10
TX7
PS1
VSS
PS0
D7
D6
D5
D4
D3
D2
D1
D0
VSS
RX0
RX1
RX2
RX3
RX4
RX5
RX6
RX7
C153
150P
R136
10K
TX0
TX1
TX2
TX3
TX4
TX5
TX6
TX7
RG8
VDD
RG1
RG2
RG3
RG4
RG5
RG6
RG7
HK7
HK8
Q304D
Q304C
Q303H
Q303G
Q303F
Q303D
Q303C
Q303B
Q303~Q303H
Q304A~Q304H
SW
E
F
G
H
L301E
L300E
L301F
L300F
L301G
L300G
L301H
L300H
MJ2E
MJ2F
MJ2G
MJ2H

e from the original pages 16-18

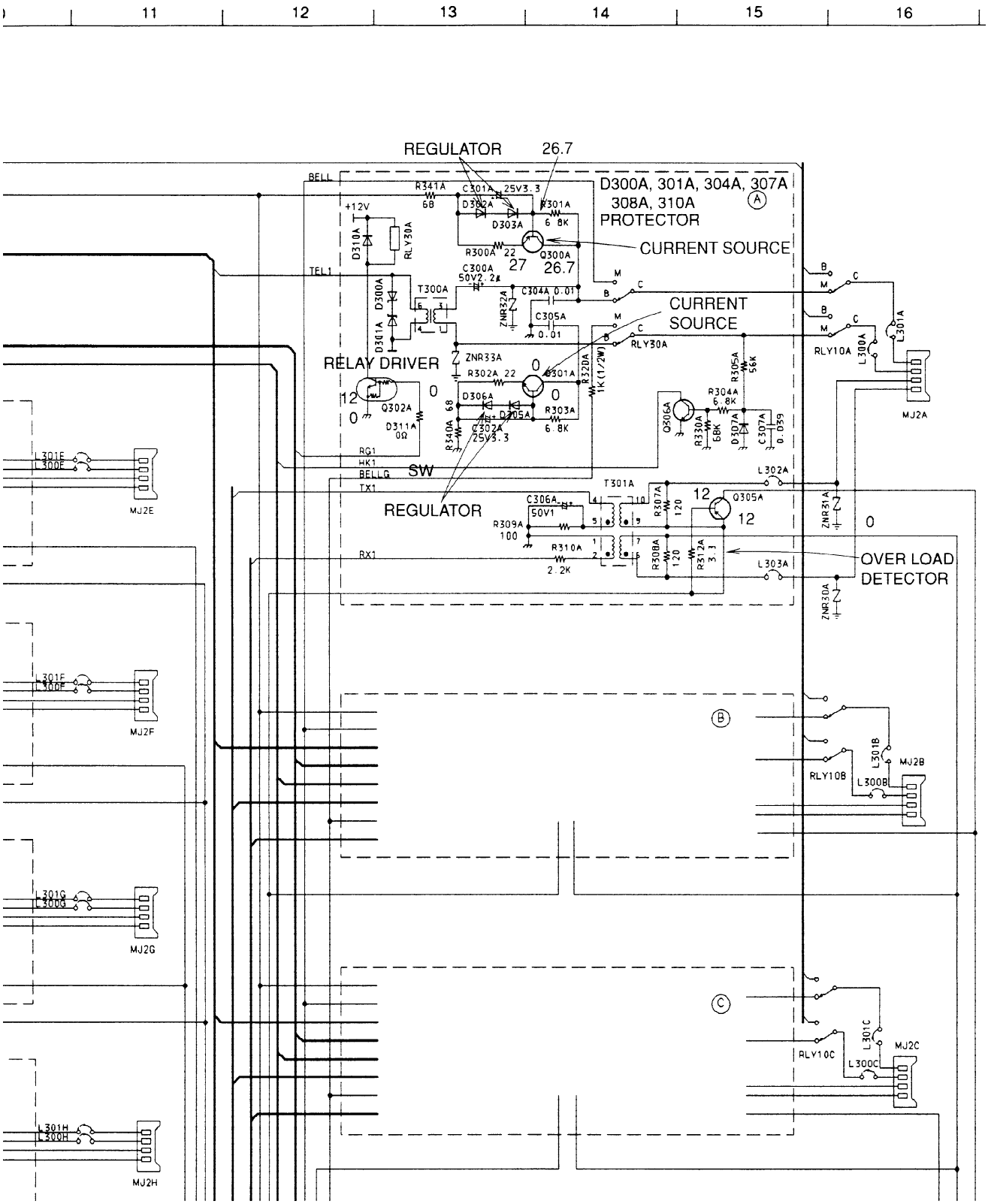

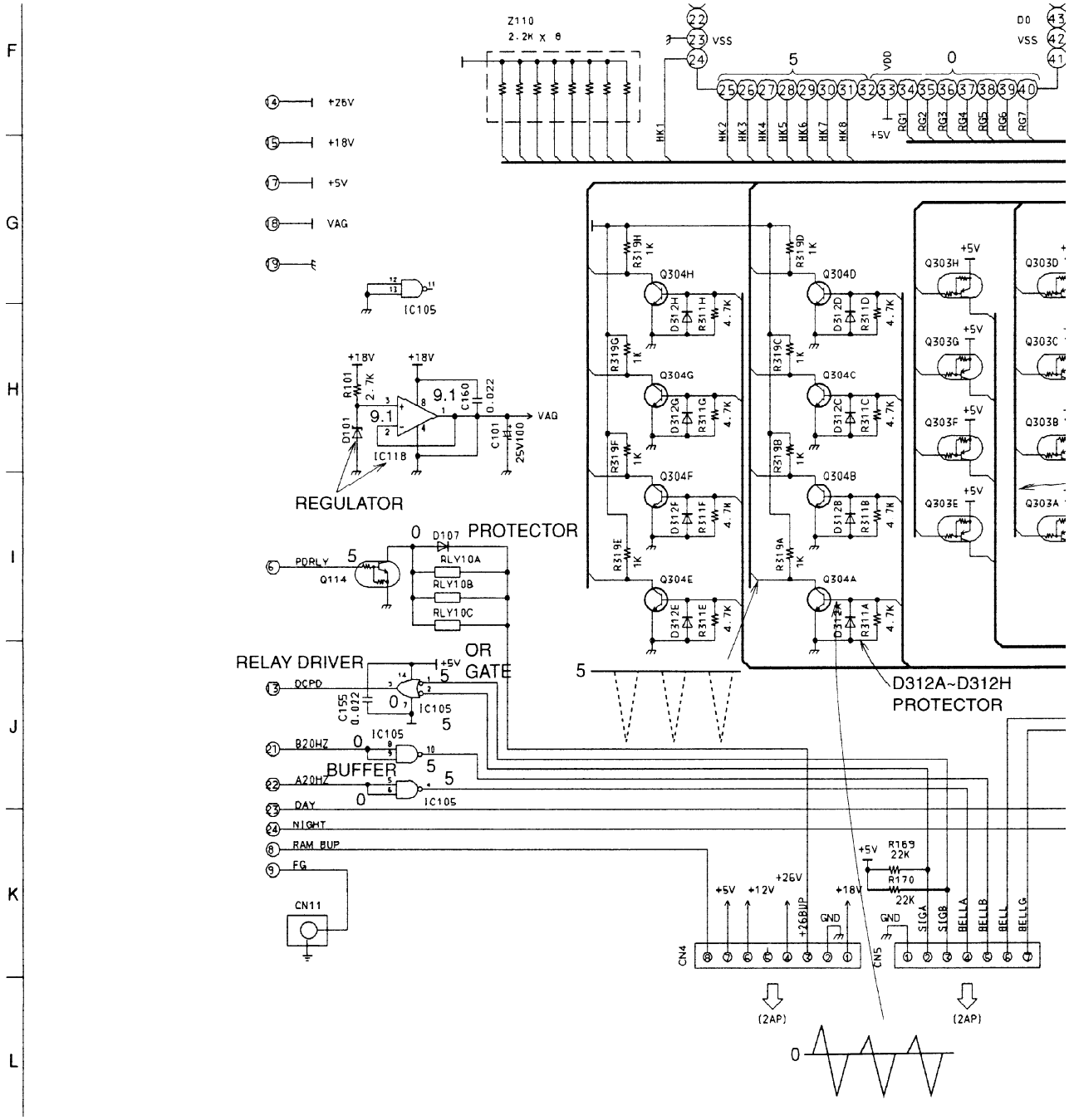

Z110
2.2K X 8
VSS
VDD
D0
+26V
+18V
+5V
VAG
IC105
R101
2.7K
C160
0.022
D101
IC118
C101
25V100
REGULATOR
D107
PROTECTOR
PDRLY
Q114
RLY10A
RLY10B
RLY10C
RELAY DRIVER
OR
GATE
DCPD
C155
0.022
B20HZ
A20HZ
BUFFER
DAY
NIGHT
RAM BUP
FG
CN11
Q304H
Q304D
Q304G
Q304C
Q304F
Q304B
Q304E
Q304A
Q303H
Q303D
Q303G
Q303C
Q303F
Q303B
Q303E
Q303A
D312A~D312H
PROTECTOR
R169
22K
R170
22K
+12V
+26BUP
GND
SIGA
SIGB
BELLA
BELLB
BELL
BELLG
CN4
CN5
(2AP)

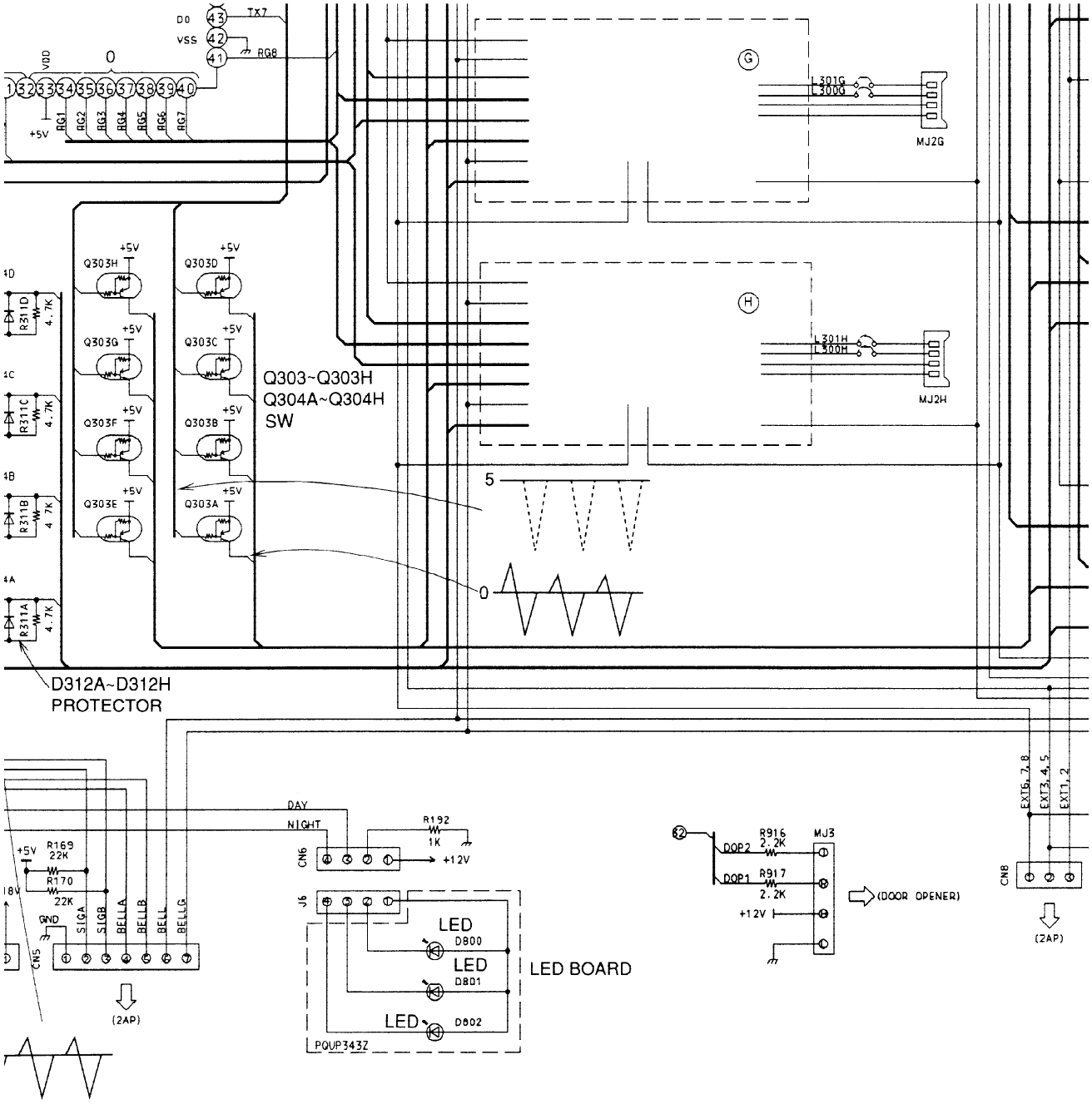

D0
VSS
TX7
RG8
VDD
0
+5V
RG1
RG2
RG3
RG4
RG5
RG6
RG7
G
L301G
L300G
MJ2G
H
L301H
L300H
MJ2H
Q303H
Q303D
Q303G
Q303C
Q303F
Q303B
Q303E
Q303A
R311D
R311C
R311B
R311A
4.7K
Q303~Q303H
Q304A~Q304H
SW
5
0
D312A~D312H
PROTECTOR
DAY
NIGHT
R192
1K
CN6
+12V
R169
22K
R170
22K
GND
SIGA
SIGB
BELLA
BELLB
BELL
BELLG
CN5
(2AP)
J6
LED
D800
D801
D802
LED BOARD
PQUP343Z
R916
2.2K
R917
2.2K
DOP2
DOP1
MJ3
(DOOR OPENER)
EXT6, 7, 8
EXT3, 4, 5
EXT1, 2
CN8
(2AP)

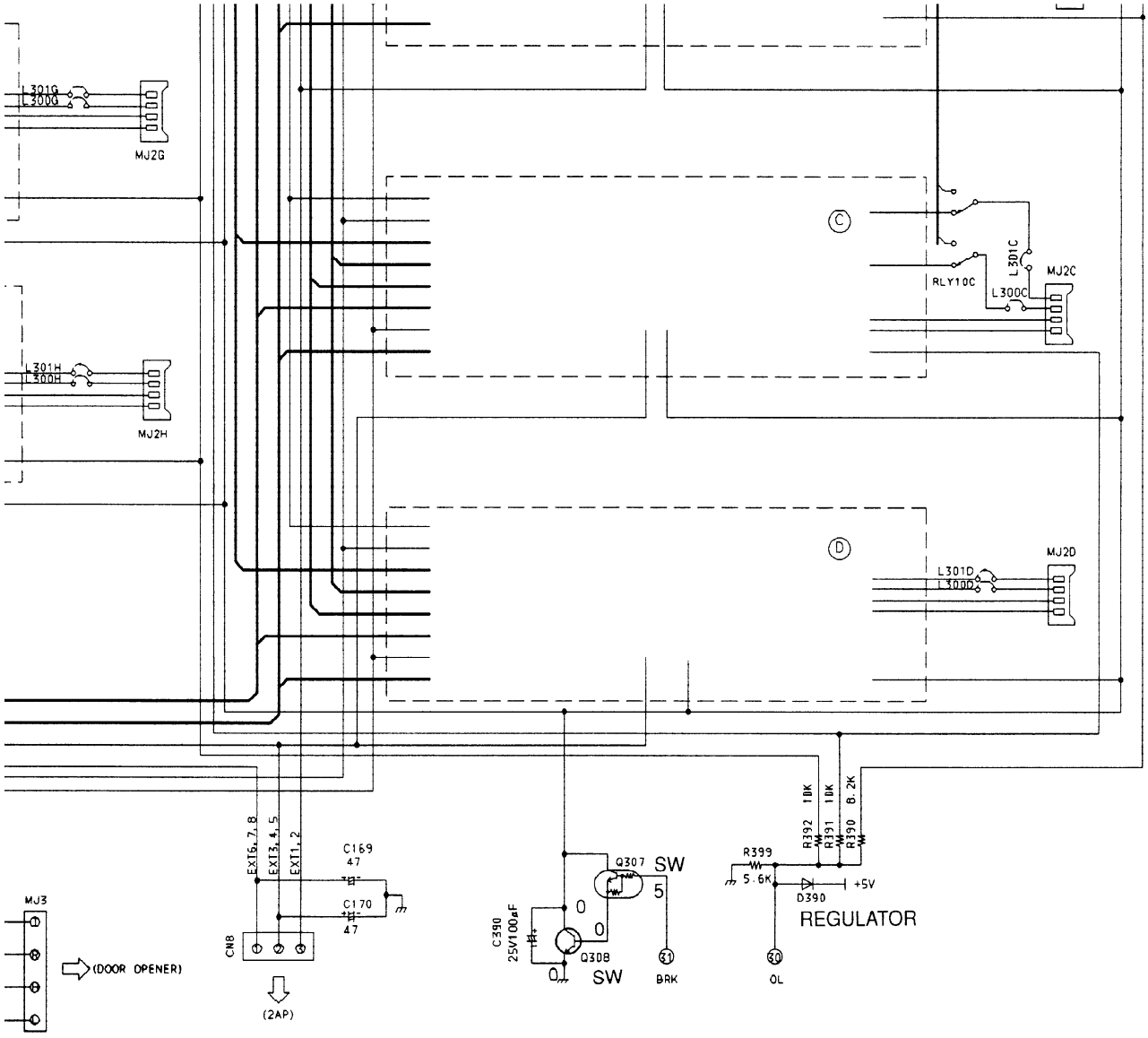
L301G
L300G
MJ2G
L301H
L300H
MJ2H
L301C
L300C
RLY10C
MJ2C
L301D
L300D
MJ2D
R392 10K
R391 10K
R390 8.2K
R399
5.6K
D390
+5V
REGULATOR
C169
47
C170
47
EXT6,7,8
EXT3,4,5
EXT1,2
CN8
(2AP)
MJ3
(DOOR OPENER)
Q307
SW
5
C390
25V100uF
Q308
SW
BRK
OL